LINDSEY

INNOVATIONS IN EHV HARDWARE DESIGNS

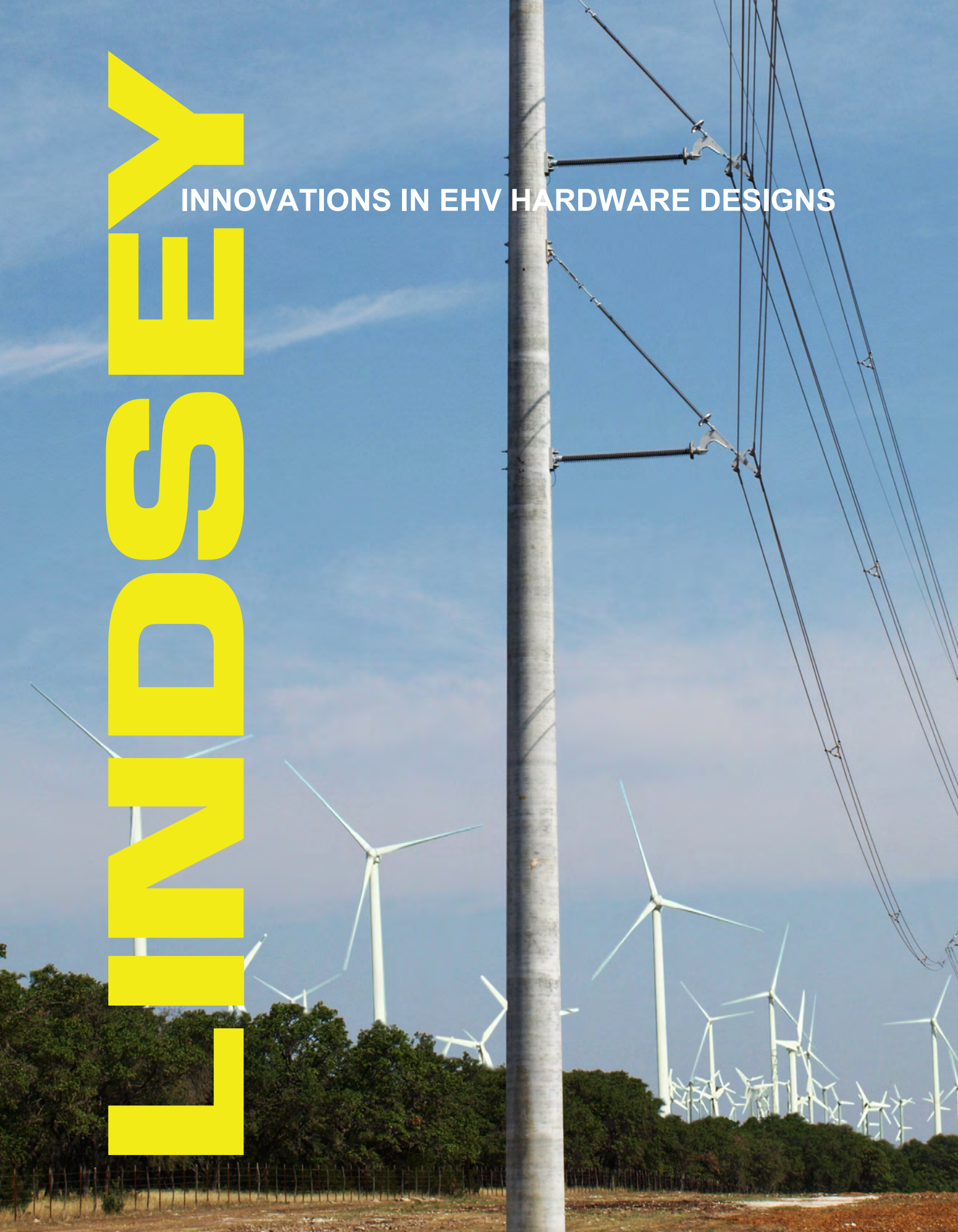

Table of Contents Page

1.	**Introduction**	3
2.	**Two (2) Conductor Bundle Suspension Assemblies with NCI Insulators**	
2.1.	30 Kip I-String	5
2.2.	30 Kip Angle V-String	6
2.3.	30 Kip V-String	7
2.4.	50 Kip I String	8
2.5.	50 Kip Running Angle	9
2.6.	50 Kip Angle V-String	10
2.7.	50 Kip V-String	11
3.	**Two (2) Conductor Bundle Dead End Assemblies with NCI Insulators**	
3.1.	60 Kip	12
3.2.	100 Kip	13
4.	**Two (2) Conductor Bundle Jumper Assemblies with NCI Insulators**	
4.1.	30 Kip I-String with Weights	14
4.2.	Vertical Post Jumper	15
5.	**Three (3) Conductor Bundle Suspension Assemblies with NCI Insulators**	
5.1.	30 Kip I-String	16
5.2.	30 Kip Angle V-String	17
5.3.	30 Kip V-String	18
5.4.	30 Kip Unequal V-String	19
5.5.	50 Kip I String	20
5.6.	50 Kip Angle V-String	21
5.7.	50 Kip V-String	22
5.8.	50 Kip Unequal V-String	23
6.	**Three (3) Conductor Bundle Dead End Assemblies with NCI Insulators**	
6.1.	90 Kip	24 & 25
6.2.	150 Kip	26 & 27
7.	**Three (3) Conductor Bundle Jumper Assemblies with NCI Insulators**	
7.1.	30 Kip I-String with Weights	28
7.2.	Vertical Post Jumper	29
8.	**Variable Components for EHV Assemblies**	
8.1.	**Typical ACSR Conductor for 345 kV and 500 kV Assemblies**	**30**
8.2.	**EHV Conductor Clamps**	**31**
8.3.	**15 Kip Side Opening Jumper Clamps**	**31**
8.4.	**Anchor Shackles**	32
8.5.	OE-OE Hot Line Links	32
8.6.	**Sample Specifications for Hardware with NCI Insulators**	33

LINDSEY SYSTEMS

Introduction

A Well Engineered and Detailed Insulator and Hardware Specification Will be Cost Effective for the Transmission Line Owner.

The purpose of this catalog is to provide the specifying engineer with representative examples of reliable and maintainable EHV Insulator and Hardware assemblies, and to provide a sample specification that spells out the necessary mechanical and electrical testing to provide a log term cost effective solution for the transmission line owner.

The job of the various components of an overhead transmission line (i.e. foundations, structures, insulators and hardware) is to keep the conductor in the air and undamaged. The total cost of the insulators and line hardware of a typical EHV transmission line is approximately 2% of the total line cost. However, if they are not properly specified and manufactured, they can account for more than 20% of the total line outrages. Typical problems are:

- Cotter pins on clevis pins wearing out due to vibration which cause the clevis pin to back out of the fitting.
- Binding of hardware under extreme loads, causing the hardware to fail in unintended ways (i.e. fatigue or bending).
- Fatigue or damage of the conductor.
- Loss of strength due to high temperature operations.
- Undetected defects due to insufficient routine lot testing of the hardware.
- Inadequate hardware design that prevents the line from being maintained energized using live line techniques.

The typical unscheduled outage of a 500 kV transmission line can cost $1 to $2 Million per day in just differential energy costs. Additional costs can be incurred for non-delivery of energy from renewable generation. Therefore, the reliability and maintainability of the insulator and hardware assemblies is critical for any transmission line owner.

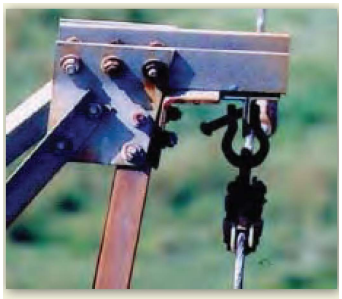

What is the cost of an unscheduled outage of a 500 kV line caused by dropping the static wire into a phase, vs. the cost of requiring a bolt, nut and cotter pin on the shackle?

The following catalog of EHV Insulator and Hardware assemblies shows representative assemblies that provide a high degree of reliability and maintainability. Typical features that provide high reliability are:

- Clevis pins are replaced with bolt, nut and cotter pins
- All connecting points between insulators and hardware and between hardware and structures or conductor have been designed for maximum articulation.
- Armor rods are used to protect the conductor from damage due to conductor motion and flashover at the tower.

- Armor rods are used to provide a heat sink for hot conductor and reduce the temperature of the clamps to normal temperatures.
- All hardware components are lot tested in accordance with “IEEE Standard for Testing of Overhead Transmission and Distribution Hardware” C135.61

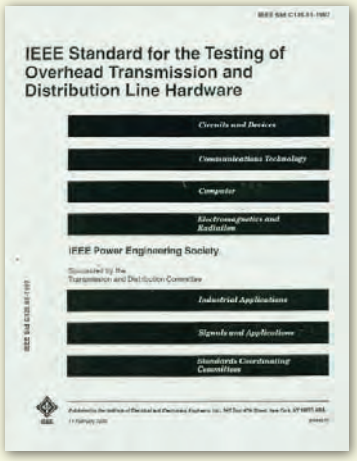
IEEE Standard for the Testing of Overhead Transmission and Distribution Line Hardware

Circuits and Devices

Communications Technology

Computer

Electromagnetics and Radiation

IEEE Power Engineering Society

Industrial Applications

Signals and Applications

Standards Coordinating Committee

The IEEE Standard for Testing of Overhead Transmission and Distribution Hardware, IEEE Std. C135.61, should be used to routinely test all EHV Components. Without testing to this standard, undetected defects that can occur during the manufacturing process can cause component failure and a line outage.

Live Line maintainability of each assembly is provided insuring that each assembly can be maintained with both bare hand AND hot stick methods.

The assembly drawings, in this catalog are arranged in the following general sequence:

I. Non-Ceramic Insulator Assemblies

a. Two (2) conductor Bundle Assemblies

i. Suspension and Angle Assemblies, 30 kip and 50 kip
ii. Dead End Assemblies
iii. Jumper Assemblies

b. Three (3) conductor Bundle Assemblies

i. Suspension and Angle Assemblies, 30 kip and 50 kip
ii. Dead End Assemblies
iii. Jumper Assemblies

II. Variable Components in the Assemblies

a. Typical ACSR Conductors
b. EHV Conductor clamps
c. 15 kip side opening Jumper Clamps
d. Anchor Shackles
e. OE-OE Hot Line Links

III. Sample Specification for Hardware with Non-Ceramic Insulators

Due to variations in conductor size, insulator design, etc., not all assemblies or components shown in this catalog have been corona tested at all voltage levels. Please confirm with the factory at time of quotation.

Obviously not every EHV assembly can be presented in a single catalog. For variations in any of the designs shown in this catalog, contact your Lindsey representative or the Lindsey factory for assistance.

ITEM	QTY.	VENDOR	PT. NO.	DESCRIPTION	MATL.	ASTM
1	1	LINDSEY	3262BNC	60 KIP ANCHOR SHACKLE	FS	A576
2	1	LINDSEY	3484/ 120	30 KIP HOT LINE LINK OE-OE	FS	A576
3	1			30 KIP POLYMER INSULATOR	PORC.	
4	1	LINDSEY	3340	30 KIP SOCKET Y-CLEVIS	DI	A536
5	1	LINDSEY	3570	40 KIP 2 BUNDLE YOKE PLATE	STL	A572
6	2	LINDSEY	3126	25 KIP "Y" CLEVIS-EYE	DI	A536
7	2	LINDSEY	1415/263	SUSPENSION CLAMP	AL	B26
8	2	PREFORMED	AR-0516	ARMOR ROD	AL	

REVISIONS		
REV.	DESCRIPTION	DATE
1	INITIAL DESIGN	1/3/2008

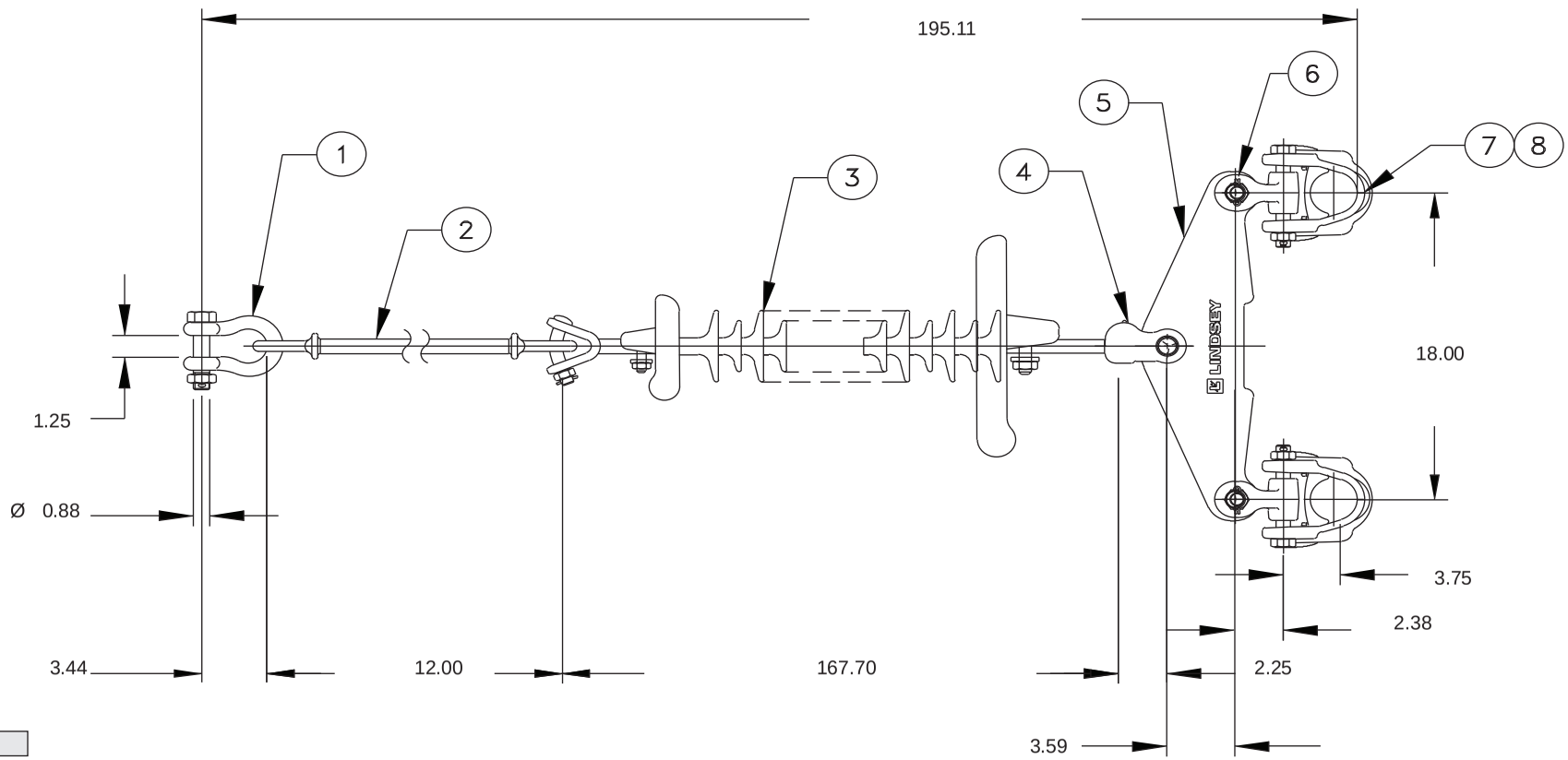

Tint block indicates alternate sizing available see catalog section 8, pages 30 - 35

6. SPECIFY ALL ARMOR RODS TO BE CORONA FREE.
5. BOLT-NUT-COTTER PIN (BNC) ON ALL STRAIGHT OR CURVED BOLTS.
4. ALL PARTS TO BE FABRICATED AND TESTED AS PER I.E.E.E.. SPECIFICATION C135.61
3. ALL COTTER KEYS ARE HUMPBACK STAINLESS STEEL (TYPE 304).
2. FINISH: ALL FERROUS PARTS ARE HOT DIPPED GALV. PER ASTM STD. A-123.
ALL FERROUS FASTENERS ARE HOT DIPPED GALV. PER ASTM STD. A-153 .
1. ALL DIMENSIONS ARE IN INCHES

DESIGNED BY	DATE	LINDSEY MANUFACTURING CO.		
PL	1/3/2008	30 KIP 2-BUNDLE I-STRING SUSPENSION ASSY. NCI. INSUL.		
JOB. REF.		PROJECT	DWG	REV
CATALOG REFERENCE			30K-2C-I-NCI	1

Due to variations in conductor size, insulator design, etc., not all assemblies have been corona tested at all voltage levels. Please confirm with the factory at time of quotation.

ITEM	QTY.	VENDOR	PT. NO.	DESCRIPTION	MATL.	ASTM
1	2	LINDSEY	3261BNC	40 KIP ANCHOR SHACKLE	F.S.	A576
2	1	LINDSEY	3484/ 162	30 KIP HOT LINE LINK OE-OE	F.S.	A576
3	1	LINDSEY	3484/ 447	30 KIP HOT LINE LINK OE-OE	F.S.	A576
4	2			30 KIP POLYMER INSULATOR	NCI	
5	2	LINDSEY	3340	30 KIP SOCKET Y-CLEVIS	D.I.	A536
6	1	LINDSEY	3590	50 KIP VEE-STRING YOKE PLATE	STL.	A572
7	2	LINDSEY	3126	25 KIP "Y" CLEVIS-EYE	DI	A536
8	2	LINDSEY	1415/271	SUSPENSION CLAMP	AL	B26
9	2	PREFORMED	AR-0516	ARMOR RODS	AL	

REVISIONS		
REV.	DESCRIPTION	DATE
1	INITIAL DESIGN	1/3/2010

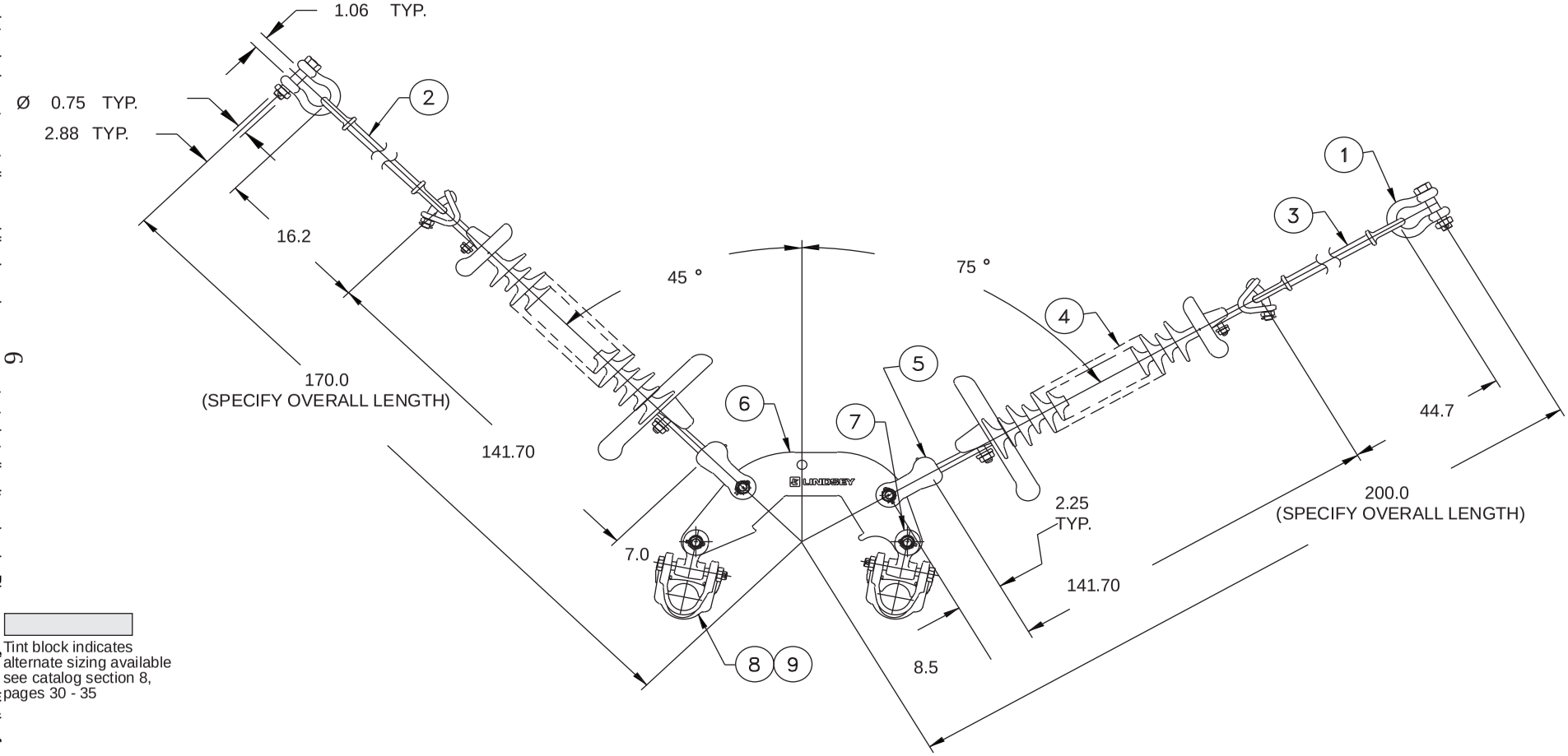

Tint block indicates alternate sizing available see catalog section 8, pages 30 - 35

6. SPECIFY ALL ARMOR RODS TO BE CORONA FREE.
5. BOLT-NUT-COTTER PIN (BNC) ON ALL STRAIGHT OR CURVED BOLTS.
4. ALL PARTS TO BE FABRICATED AND TESTED AS PER I.E.E.E.. SPECIFICATION C135.61
3. ALL COTTER KEYS ARE HUMPBACK STAINLESS STEEL (TYPE 304).
2. FINISH: ALL FERROUS PARTS ARE HOT DIPPED GALV. PER ASTM STD. A-123.
ALL FERROUS FASTENERS ARE HOT DIPPED GALV. PER ASTM STD. A-153.
1. ALL DIMENSIONS ARE IN INCHES

DESIGNED BY	DATE	LINDSEY MANUFACTURING CO.		
PL	1/3/2010	30 KIP 2-BUNDLE VEE STRING ANGLE NCI INSULATOR ASSY.		
JOB. REF.		PROJECT	DWG	REV
CATALOG REFERENCE			30K-2C-AV-NCI	1

Due to variations in conductor size, insulator design, etc., not all assemblies have been corona tested at all voltage levels. Please confirm with the factory at time of quotation.

ITEM	QTY.	VENDOR	PT. NO.	DESCRIPTION	MATL.	ASTM
1	2	LINDSEY	3262BNC	60 KIP ANCHOR SHACKLE	FS	A576
2	2	LINDSEY	3484/ 178	30 KIP HOT LINE LINK	FS	
3	2			30 KIP POLYMER ILSULATOR	NCI	
4	2	LINDSEY	3340	30 KIP SOCKET CLEVIS	DI	A536
5	1	LINDSEY	3580	40 KIP V-STRING YOKE PLATE	STL	A572
6	2	LINDSEY	3126	25 KIP "Y" CLEVIS-EYE	DI	A536
7	2	LINDSEY	1415/271	SUSPENSION CLAMP	AL	B26
8	2	PREFORMED	AR-0516	ARMOR RODS	AL	

REVISIONS		
REV.	DESCRIPTION	DATE
1	INITIAL DESIGN	1/3/2010

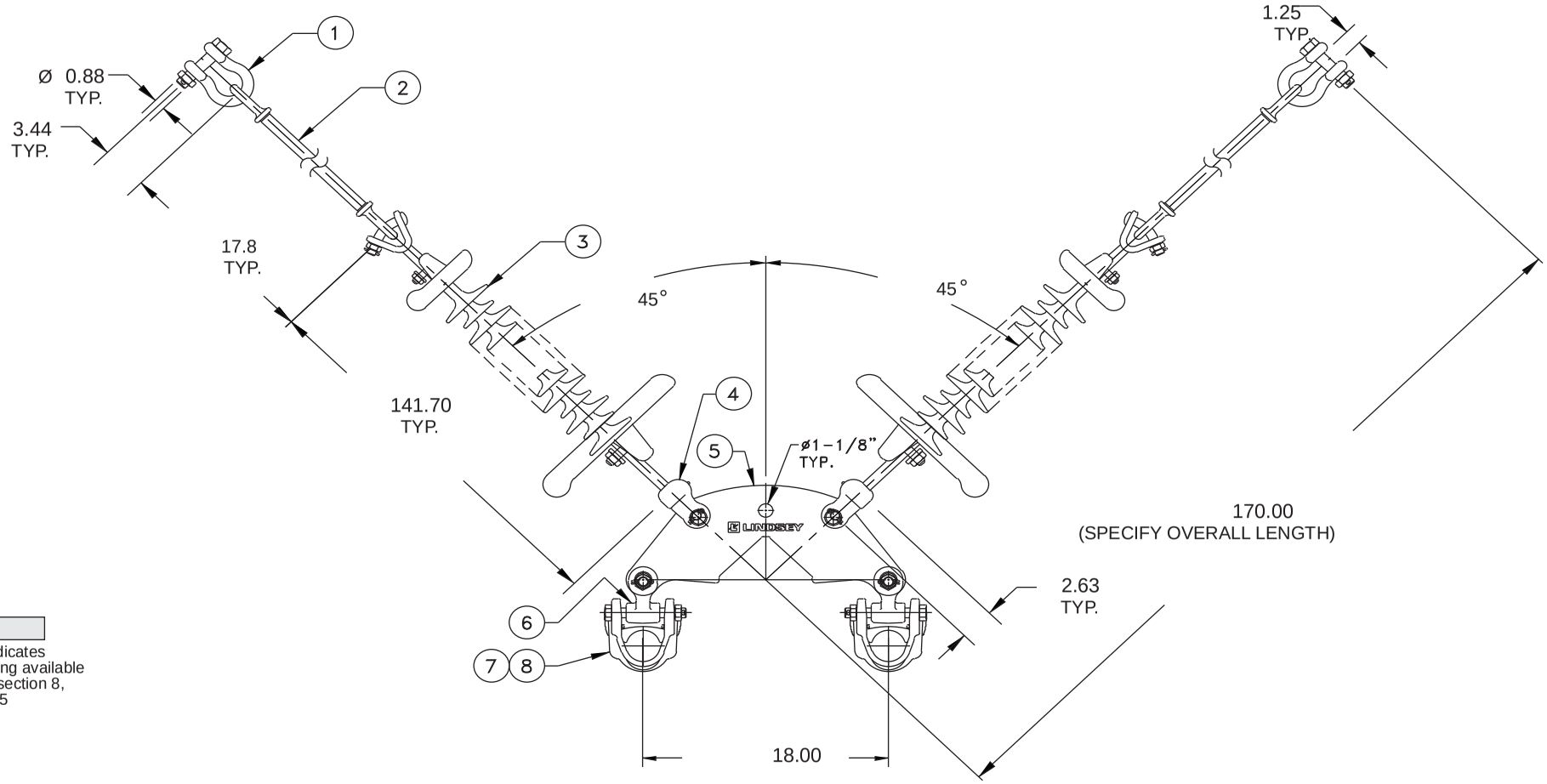

Tint block indicates alternate sizing available see catalog section 8, pages 30 - 35

6. SPECIFY ALL ARMOR RODS TO BE CORONA FREE.
5. BOLT-NUT-COTTER PIN (BNC) ON ALL STRAIGHT OR CURVED BOLTS.
4. ALL PARTS TO BE FABRICATED AND TESTED AS PER I.E.E.E.. SPECIFICATION C135.61
3. ALL COTTER KEYS ARE HUMPBACK STAINLESS STEEL (TYPE 304).
2. FINISH: ALL FERROUS PARTS ARE HOT DIPPED GALV. PER ASTM STD. A-123.
ALL FERROUS FASTENERS ARE HOT DIPPED GALV. PER ASTM STD. A-153.
1. ALL DIMENSIONS ARE IN INCHES

DESIGNED BY	DATE	LINDSEY MANUFACTURING CO.		
PL	1/3/2010	30 KIP 2-BUNDLE V-STRING SUSPENSION ASSY. NCI. INSUL.		
JOB. REF.		PROJECT	DWG	REV
CATALOG REFERENCE			30K-2C-V-NCI	1

Due to variations in conductor size, insulator design, etc., not all assemblies have been corona tested at all voltage levels. Please confirm with the factory at time of quotation.

ITEM	QTY.	VENDOR	PT. NO.	DESCRIPTION	MATL.	ASTM
1	1	LINDSEY	3262BNC	60 KIP ANCHOR SHACKLE	FS	A576
2	1	LINDSEY	3487/ 120	50 KIP HOT LINE LINK OE-OE	FS	A576
3	1			50 KIP POLYMER INSULATOR	NCI	
4	1	LINDSEY	3344	50 KIP SOCKET CLEVIS	DI	A536
5	1	LINDSEY	3572	50 KIP 2-BUNDLE YOKE PLATE	STL	A572
6	2	LINDSEY	3126	25 KIP "Y" CLEVIS-EYE	DI	A536
7	2	LINDSEY	1415/248	SUSPENSION CLAMP	AL	B26
8	2	PREFORMED	AR-0511	ARMOR RODS	AL	

REVISIONS		
REV.	DESCRIPTION	DATE
1	INITIAL DESIGN	1/3/2010

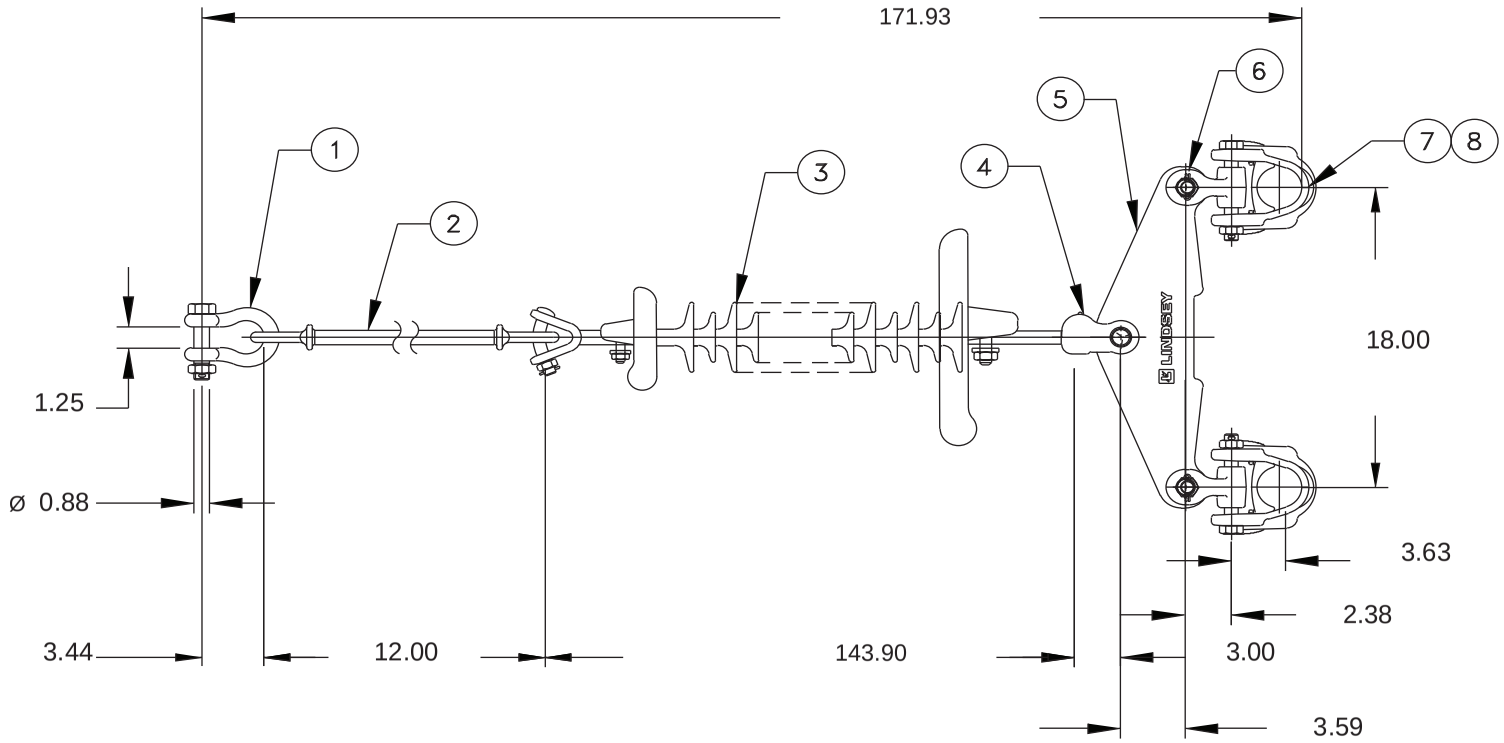

Tint block indicates alternate sizing available see catalog section 8, pages 30 - 35

6. SPECIFY ALL ARMOR RODS TO BE CORONA FREE.
5. BOLT-NUT-COTTER PIN (BNC) ON ALL STRAIGHT OR CURVED BOLTS.
4. ALL PARTS TO BE FABRICATED AND TESTED AS PER I.E.E.E.. SPECIFICATION C135.61
3. ALL COTTER KEYS ARE HUMPBACK STAINLESS STEEL (TYPE 304).
2. FINISH: ALL FERROUS PARTS ARE HOT DIPPED GALV. PER ASTM STD. A-123.
ALL FERROUS FASTENERS ARE HOT DIPPED GALV. PER ASTM STD. A-153.
1. ALL DIMENSIONS ARE IN INCHES

DESIGNED BY	DATE	LINDSEY MANUFACTURING CO.		
PL	1/3/2008	50 KIP 2-BUNDLE I-STRING SUSPENSION ASSY. NCI. INSUL.		
JOB. REF.		PROJECT	DWG	REV
CATALOG REFERENCE			50K-2C-I-NCI	1

Due to variations in conductor size, insulator design, etc., not all assemblies have been corona tested at all voltage levels. Please confirm with the factory at time of quotation.

ITEM	QTY.	VENDOR	PT. NO.	DESCRIPTION	MATL.	ASTM
1	1	LINDSEY	3252BNC	60 KIP ANCHOR SHACKLE	FS	A576
2	1	LINDSEY	3484/ 275	50 KIP HOT LINE LINK	FS	A576
3	1			50 KIP POLYMER INSULATOR		
4	1	LINDSEY	3344	50 KIP SOCKET Y-CLEVIS		A536
5	1	LINDSEY	R-20975	50 KIP YOKE PLATE	STL	A572
6	2	LINDSEY	3126	25 KIP "Y" CLEVIS-EYE	DI	A536
7	2	LINDSEY	1415/271	SUSPENSION CLAMP	AL	B26
8	2	PREFORMED	AR-0516	ARMOR RODS	AL	

REVISIONS		
REV.	DESCRIPTION	DATE
1	INITIAL DESIGN	1/3/2010

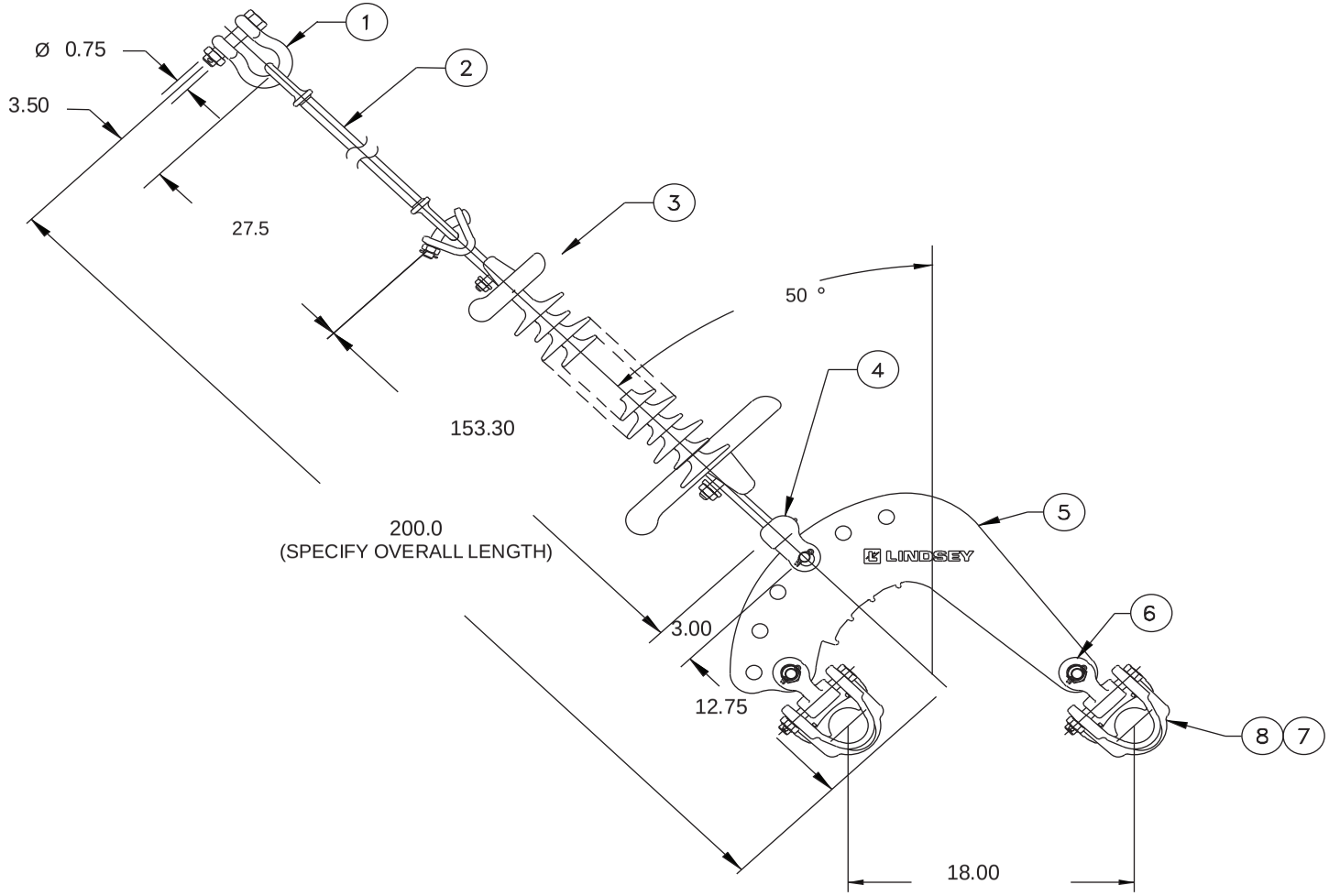

Tint block indicates alternate sizing available see catalog section 8, pages 30 - 35

6. SPECIFY ALL ARMOR RODS TO BE CORONA FREE.
5. BOLT-NUT-COTTER PIN (BNC) ON ALL STRAIGHT OR CURVED BOLTS.
4. ALL PARTS TO BE FABRICATED AND TESTED AS PER I.E.E.E.. SPECIFICATION C135.61
3. ALL COTTER KEYS ARE HUMPBACK STAINLESS STEEL (TYPE 304).
2. FINISH: ALL FERROUS PARTS ARE HOT DIPPED GALV. PER ASTM STD. A-123.
ALL FERROUS FASTENERS ARE HOT DIPPED GALV. PER ASTM STD. A-153 .
1. ALL DIMENSIONS ARE IN INCHES.

DESIGNED BY	DATE	LINDSEY MANUFACTURING CO.	
PL	1/3/2010	50 KIP 2-BUNDLE RUNNING ANGLE	
JOB. REF.	PROJECT	DWG	REV
CATALOG REFERENCE		50K-2C-RA-NCI	1

Due to variations in conductor size, insulator design, etc., not all assemblies have been corona tested at all voltage levels. Please confirm with the factory at time of quotation.

ITEM	QTY.	VENDOR	PT. NO.	DESCRIPTION	MATL.	ASTM
1	2	LINDSEY	3262BNC	60 KIP ANCHOR SHACKLE	F.S.	A576
2	1	LINDSEY	3487/ 420	50 KIP HOT LINE LINK OE-OE	F.S.	A576
3	1	LINDSEY	3487/ 155	50 KIP HOT LINE LINK OE-OE	F.S.	A576
4	2			50 KIP POLYMER INSULATOR	NCI	
5	2	LINDSEY	3181BNC	50 KIP SOCKET Y-CLEVIS	D.I.	A536
6	1	LINDSEY	3592	50 KIP YOKE PLATE 2-COND.	STL.	A572
7	2	LINDSEY	3126	25 KIP "Y" CLEVIS-EYE	DI	A536
8	2	LINDSEY	1415/248	SUSPENSION CLAMP	AL	B26
9	2	PREFORMED	AR-0512	ARMOR RODS	AL	

REVISIONS		
REV.	DESCRIPTION	DATE
1	INITIAL DESIGN	1/3/2010

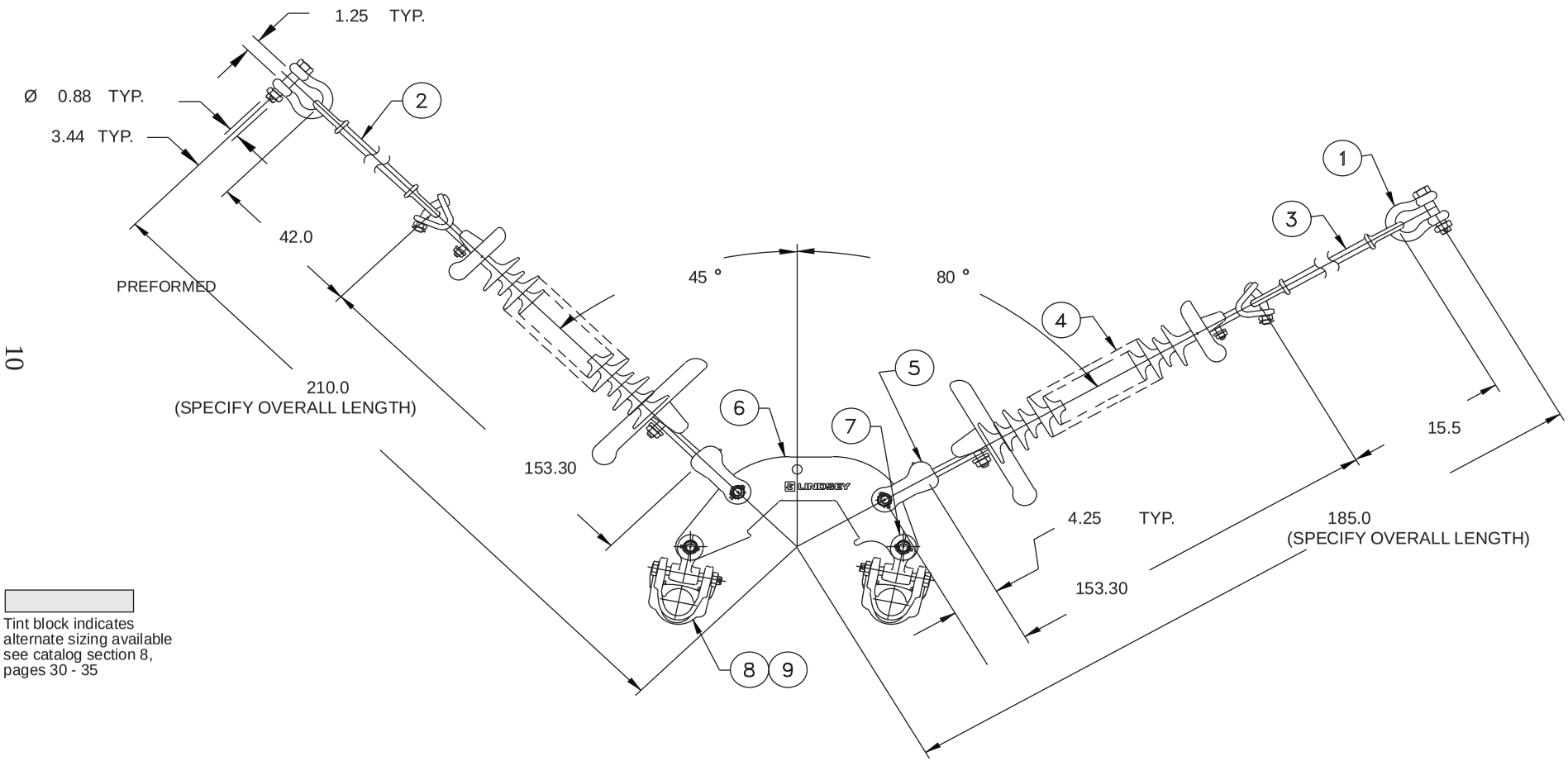

Tint block indicates alternate sizing available see catalog section 8, pages 30 - 35

6. SPECIFY ALL ARMOR RODS TO BE CORONA FREE.
5. BOLT-NUT-COTTER PIN (BNC) ON ALL STRAIGHT OR CURVED BOLTS.
4. ALL PARTS TO BE FABRICATED AND TESTED AS PER I.E.E.E.. SPECIFICATION C135.61
3. ALL COTTER KEYS ARE HUMPBACK STAINLESS STEEL (TYPE 304) .
2. FINISH: ALL FERROUS PARTS ARE HOT DIPPED GALV. PER ASTM STD. A-123 .
ALL FERROUS FASTENERS ARE HOT DIPPED GALV. PER ASTM STD. A-153 .
1. ALL DIMENSIONS ARE IN INCHE S

DESIGNED BY	DATE	LINDSEY MANUFACTURING CO.		
PL	1/3/2010	50 KIP 2-BUNDLE VEE STRING ANGLE NCI INSULATOR ASSY.		
JOB. REF.		PROJECT	DWG	REV
CATALOG REFERENCE			50K-2C-AV-NCI	1

Due to variations in conductor size, insulator design, etc., not all assemblies have been corona tested at all voltage levels. Please confirm with the factory at time of quotation.

ITEM	QTY.	VENDOR	PT. NO.	DESCRIPTION	MATL.	ASTM
1	2	LINDSEY	3262BNC	60 KIP ANCHOR SHACKLE	FS	A576
2	2	LINDSEY	3487/ 167	50 KIP HOT LINE LINK	FS	A576
3	2	LINDSEY	3344	50 KIP SOCKET Y-CLEVIS	DI	536
4	2	LINDSEY	502-SC1310-YK	50 KIP POLYMER INSULATO R		
5	1	LINDSEY	3582	50 KIP YOKE PLATE	STL	A572
6	2	LINDSEY	3126	25 KIP "Y" CLEVIS-EYE	DI	A536
7	2	LINDSEY	1415/248	SUSPENSION CLAMP	AL	B26
8	2	PREFORMED	AR-0512	ARMOR RODS	AL	

REVISIONS		
REV.	DESCRIPTION	DATE
1	INITIAL DESIGN	1/3/2010

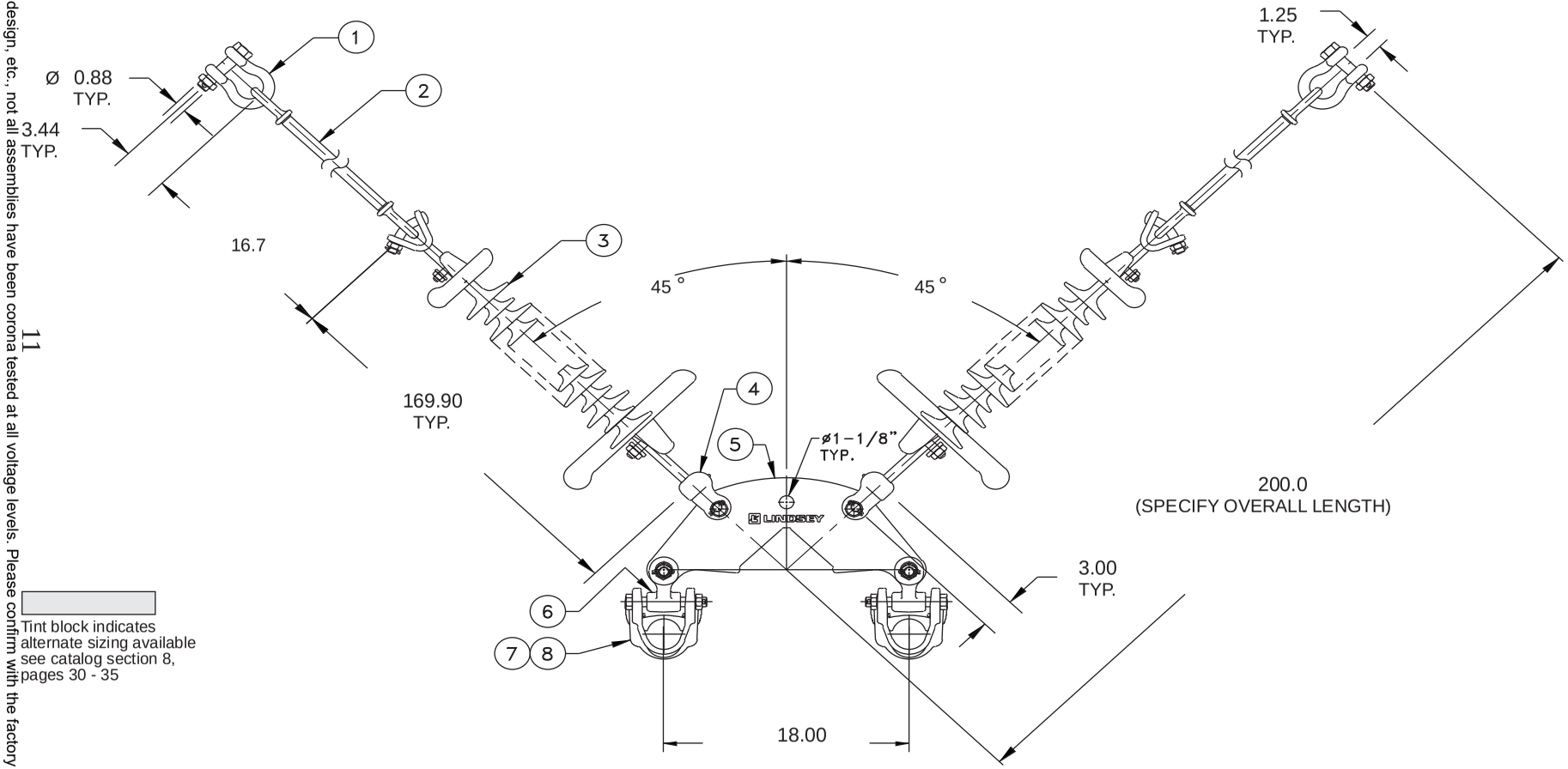

Tint block indicates alternate sizing available see catalog section 8, pages 30 - 35

6. SPECIFY ALL ARMOR RODS TO BE CORONA FREE.
5. BOLT-NUT-COTTER PIN (BNC) ON ALL STRAIGHT OR CURVED BOLTS.
4. ALL PARTS TO BE FABRICATED AND TESTED AS PER I.E.E.E.. SPECIFICATION C135.61
3. ALL COTTER KEYS ARE HUMPBACK STAINLESS STEEL (TYPE 304).
2. FINISH: ALL FERROUS PARTS ARE HOT DIPPED GALV. PER ASTM STD. A-123.
ALL FERROUS FASTENERS ARE HOT DIPPED GALV. PER ASTM STD. A-153 .
1. ALL DIMENSIONS ARE IN INCHES

DESIGNED BY	DATE	LINDSEY MANUFACTURING CO.		
PL	1/3/2010	50 KIP 2-BUNDLE V-STRING SUSPENSION ASSY. NCI. INSUL.		
JOB. REF.		PROJECT	DWG	REV
CATALOG REFERENCE			50K-2C-V-NCI	1

Due to variations in conductor size, insulator design, etc., not all assemblies have been corona tested at all voltage levels. Please confirm with the factory at time of quotation.

ITEM	QTY.	VENDOR	PT. NO.	DESCRIPTION	MATL.	ASTM
1	1	LINDSEY	3264BNC	102 KIP ANCHOR SHACKLE	F.S.	C1038
2	1	LINDSEY	3405	60 KIP CHAIN LINK	F.S.	C1038
3	1	LINDSEY	R-21565	60 KIP YOKE PLATE	STL.	A572
4	2			30 KIP POLYMER INSULATOR	NCI	
5	2	LINDSEY	3341SN	30 KIP SOCKET Y-CLEVIS	D.I.	A536
6	1	LINDSEY	R-21566	60 KIP YOKE PLATE	STL.	A572
7	2	LINDSEY	R-20512	CORONA RING (IF REQ'D)	AL	B241
8	3	LINDSEY	3262BNC	60 KIP ANCHOR SHACKLE	F.S.	C1038

REVISIONS		
REV.	DESCRIPTION	DATE
1	INITIAL DESIGN	1/3/2010

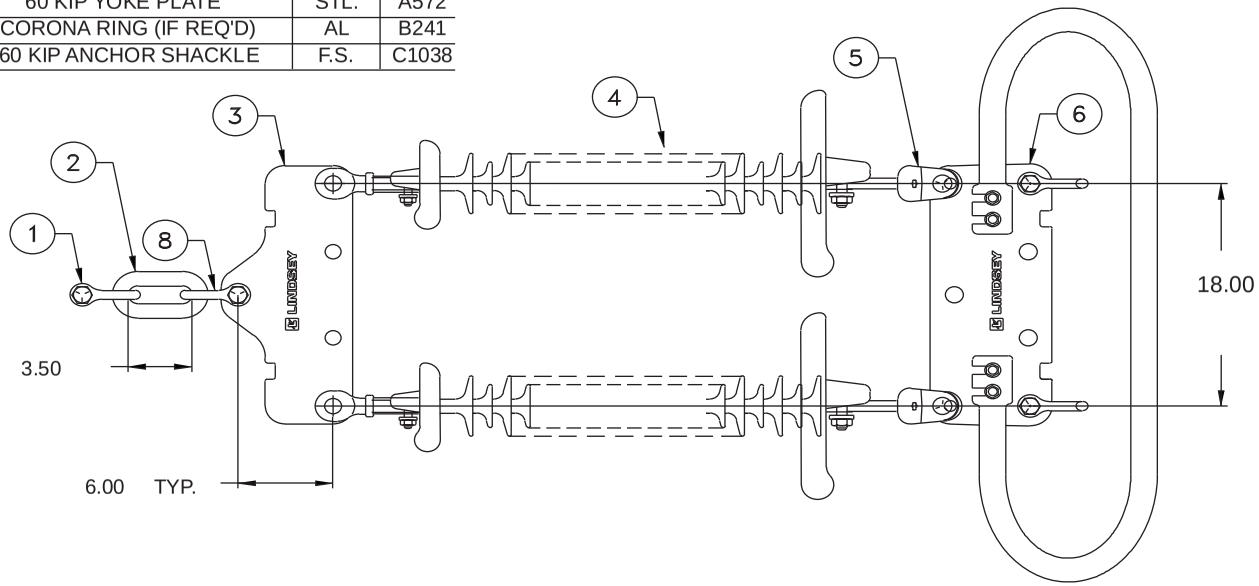

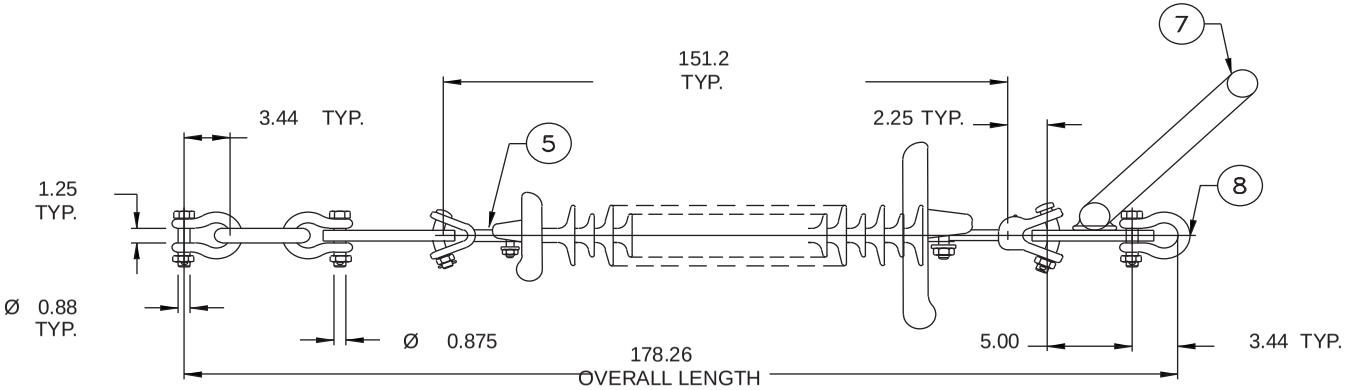

Tint block indicates alternate sizing available see catalog section 8, pages 30 - 35

9. ALL SOCKET COTTER KEYS TO HAVE AN UPWARD PULL DIRECTION.
8. ALL SLOTS MIN 1-1/8" WIDTH
7. ALL WORKING HOLES Ø1-1/8" AND HAVE A MIN. STRENGTH OF 30 KIP.
6. ALL HOLES WITH CURVED BOLTS TO HAVE 1/8" MIN. CHAMFER BOTH SIDES.
5. BOLT-NUT-COTTER PIN (BNC) ON ALL STRAIGHT OR CURVED BOLTS.
4. ALL PARTS TO BE FABRICATED AND TESTED AS PER I.E.E.E.. SPECIFICATION C135.61
3. ALL COTTER KEYS ARE HUMPBACK STAINLESS STEEL (TYPE 304).
2. FINISH: ALL FERROUS PARTS ARE HOT DIPPED GALV. PER ASTM STD. A-123.
ALL FERROUS FASTENERS ARE HOT DIPPED GALV. PER ASTM STD. A-153.
1. ALL DIMENSIONS ARE IN INCHES

DESIGNED BY	DATE	LINDSEY MANUFACTURING CO.		
PL	1/3/2010	60 KIP 2-BUNDLE DEAD-END NCI INSULATOR ASSY.		
JOB. REF.		PROJECT	DWG	REV
CATALOG REFERENCE			60K-2C-DE-NC1	1

Due to variations in conductor size, insulator design, etc., not all assemblies have been corona tested at all voltage levels. Please confirm with the factory at time of quotation.

ITEM	QTY.	VENDOR	PT. NO.	DESCRIPTION	MATL.	ASTM
1	2	LINDSEY	3264BNC	102 KIP ANCHOR SHACKLE	F.S.	C1038
2	1	LINDSEY	3406	110 KIP CHAIN LINK	F.S.	C1038
3	1	LINDSEY	R-21565	100 KIP YOKE PLATE	STL.	A572
4	3			50 KIP POLYMER INSULATOR	NCI	
5	2	LINDSEY	3341SN	30 KIP SOCKET Y-CLEVIS	D.I.	A536
6	1	LINDSEY	R-21566	100 KIP YOKE PLATE	STL.	A572
7	2	LINDSEY	R-20512	CORONA RING (IF REQ'D)	AL	B241
8	2	LINDSEY	3262BNC	60 KIP ANCHOR SHACKLE	F.S.	C1038

REVISIONS		
REV.	DESCRIPTION	DATE
1	INITIAL DESIGN	1/3/2010

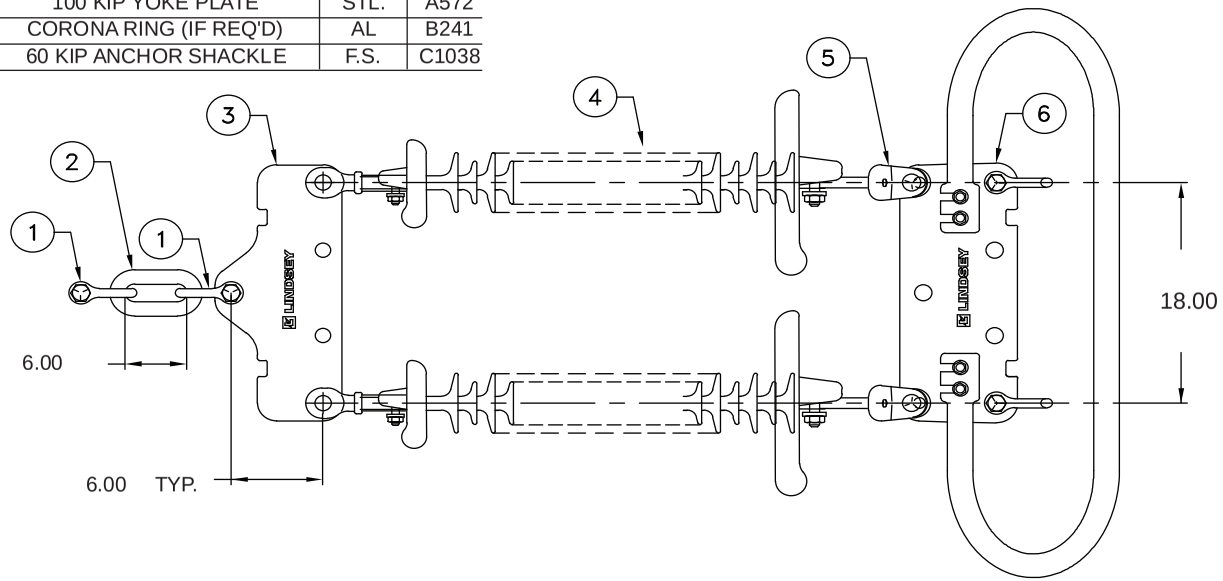

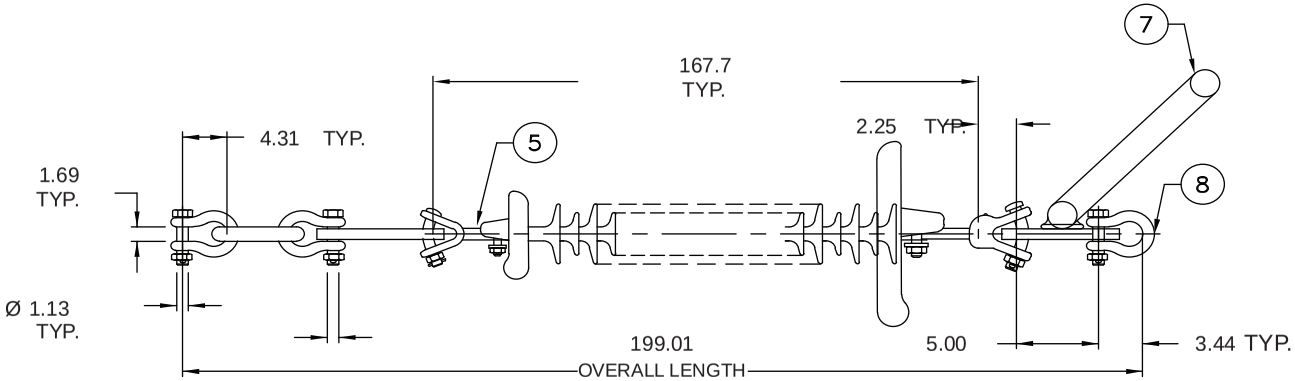

Tint block indicates alternate sizing available see catalog section 8, pages 30 - 35

9. ALL SOCKET COTTER KEYS TO HAVE AN UPWARD PULL DIRECTION.
8. ALL SLOTS MIN 1-1/8" WIDTH
7. ALL WORKING HOLES Ø1-1/8" AND HAVE A MIN. STRENGTH OF 100 KIP.
6. ALL HOLES WITH CURVED BOLTS TO HAVE 1/8" MIN. CHAMFER BOTH SIDES.
5. BOLT-NUT-COTTER PIN (BNC) ON ALL STRAIGHT OR CURVED BOLTS.
4. ALL PARTS TO BE FABRICATED AND TESTED AS PER I.E.E.E.. SPECIFICATION C135.61
3. ALL COTTER KEYS ARE HUMPBACK STAINLESS STEEL (TYPE 304).
2. FINISH: ALL FERROUS PARTS ARE HOT DIPPED GALV. PER ASTM STD. A-123.
ALL FERROUS FASTENERS ARE HOT DIPPED GALV. PER ASTM STD. A-153.
1. ALL DIMENSIONS ARE IN INCHES

DESIGNED BY	DATE	LINDSEY MANUFACTURING CO.	
PL	1/3/2010	100 KIP 2-BUNDLE DEAD-END NCI INSULATOR ASSY.	
JOB. REF.	PROJECT	DWG	REV
CATALOG REFERENCE		100K-2C-DE-NCI	1

Due to variations in conductor size, insulator design, etc., not all assemblies have been corona tested at all voltage levels. Please confirm with the factory at time of quotation.

ITEM	QTY.	VENDOR	PT. NO.	DESCRIPTION	MATL.	ASTM
1	1	LINDSEY	3231BNC	30 KIP ANCHOR SHACKLE	F.S.	A576
2	1	LINDSEY	3484/ 120	30 KIP OVAL-EYE HOT LINE LINK	F.S.	A576
3	1			30 KIP POLYMER INSULATOR	NCI	
4	1	LINDSEY	3187BNC	30 KIP SOCKET CLEVIS EYE	F.S.	A576
5	1	LINDSEY	R-21136	10 KIP 3-COND. JUMPER YOKE	STL.	A572
6	2	LINDSEY	1407	10 KIP SIDE OPENING CLAMP	STL.	A572
7	1	LINDSEY	R-18176	300 lb. HOLD DOWN WEIGHT ASSY.	D.I.	A536
8	2	PREFORMED	AR-0512	ARMOR RODS	AL	

REVISIONS		
REV.	DESCRIPTION	DATE
1	INITIAL DESIGN	1/3/2010

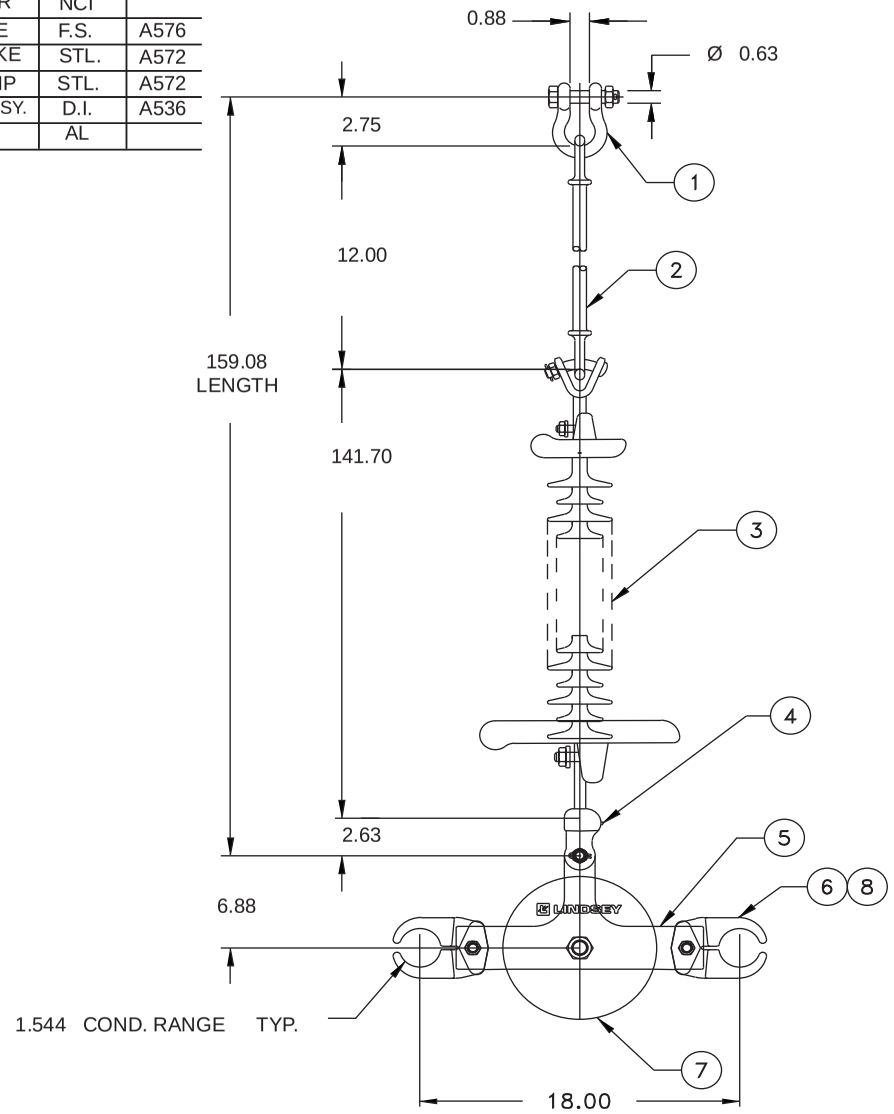

Tint block indicates alternate sizing available see catalog section 8, pages 30 - 35

6. SPECIFY ALL ARMOR RODS TO BE CORONA FREE.
5. BOLT-NUT-COTTER PIN (BNC) ON ALL STRAIGHT OR CURVED BOLTS.
4. ALL PARTS TO BE FABRICATED AND TESTED AS PER I.E.E.E.. SPECIFICATION C135.61
3. ALL COTTER KEYS ARE HUMPBACK STAINLESS STEEL (TYPE 304).
2. FINISH: ALL FERROUS PARTS ARE HOT DIPPED GALV. PER ASTM STD. A-123.
ALL FERROUS FASTENERS ARE HOT DIPPED GALV. PER ASTM STD. A-153.
1. ALL DIMENSIONS ARE IN INCHES

DESIGNED BY	DATE	LINDSEY MANUFACTURING CO.		
PL	1/3/2010	30 KIP 2-BUNDLE I-STRING NCI INSULATOR JUMPER ASSY.		
JOB. REF.		PROJECT	DWG	REV
CATALOG REFERENCE			30K-2C-J-NCI	1

Due to variations in conductor size, insulator design, etc., not all assemblies have been corona tested at all voltage levels. Please confirm with the factory at time of quotation.

ITEM	QTY.	VENDOR	PT. NO.	DESCRIPTION	MATL.	ASTM
1	1			POST POLYMER INSULATOR	NCI	
2	1	LINDSEY	R-6038-2	10 KIP 2-COND. YOKE PLATE	STL.	A572
3	2	LINDSEY	1407	CONDUCTOR SIDE CLAMP	LA	B26
4	2	PREFORMED	AR-0511	ARMOR ROD	LA	

REVISIONS		
REV.	DESCRIPTION	DATE
1	INITIAL DESIGN	1/3/2010

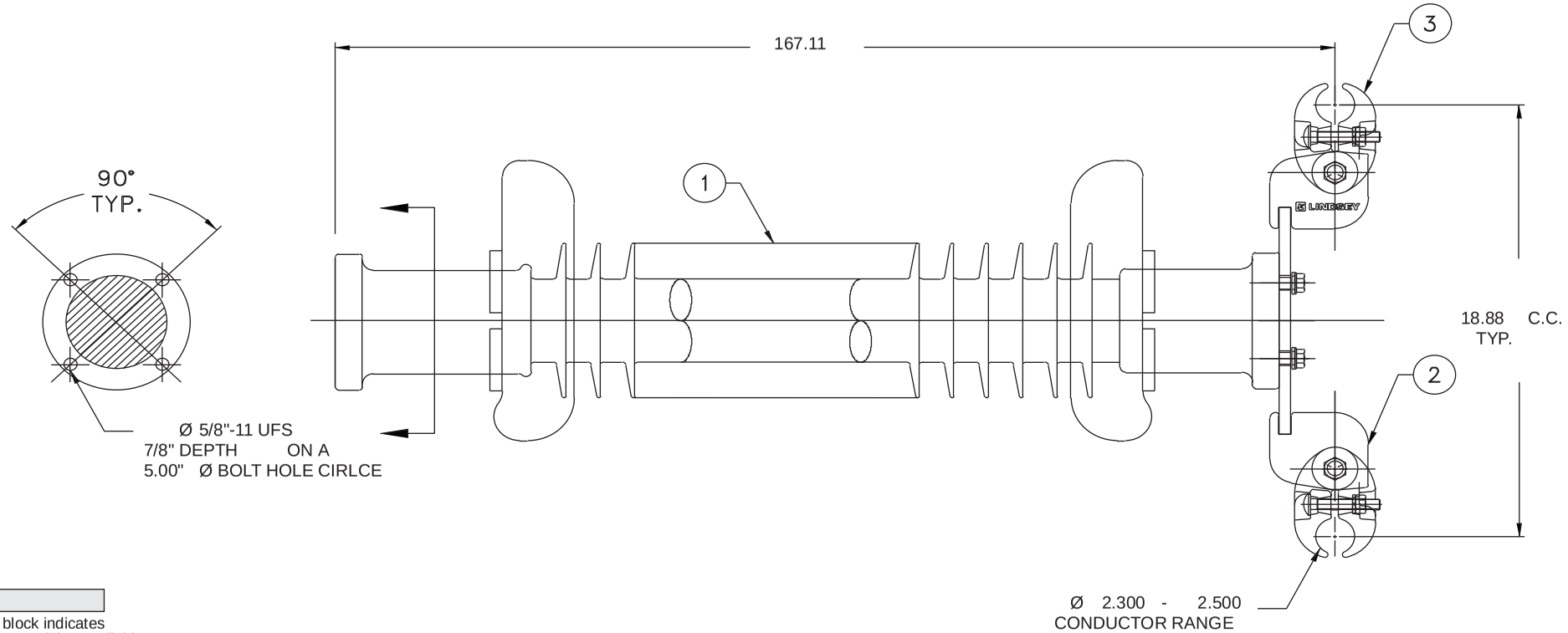

Tint block indicates alternate sizing available see catalog section 8, pages 30 - 35

6. SPECIFY ALL ARMOR RODS TO BE CORONA FREE.
5. BOLT-NUT-COTTER PIN (BNC) ON ALL STRAIGHT OR CURVED BOLTS.
4. ALL PARTS TO BE FABRICATED AND TESTED AS PER I.E.E.E.. SPECIFICATION C135.61
3. ALL COTTER KEYS ARE HUMPBACK STAINLESS STEEL (TYPE 304) .
2. FINISH: ALL FERROUS PARTS ARE HOT DIPPED GALV. PER ASTM STD. A-123 .
ALL FERROUS FASTENERS ARE HOT DIPPED GALV. PER ASTM STD. A-153 .
1. ALL DIMENSIONS ARE IN INCHES

DESIGNED BY	DATE	LINDSEY MANUFACTURING CO.		
PL	1/3/2010	2-CONDUCTOR POST NCI INSULATOR ASSY.		
JOB. REF.		PROJECT	DWG	REV
CATALOG REFERENCE			2C-POSTJ-NCI	1

Due to variations in conductor size, insulator design, etc., not all assemblies have been corona tested at all voltage levels. Please confirm with the factory at time of quotation.

ITEM	QTY.	VENDOR	PT. NO.	DESCRIPTION	MATL.	ASTM
1	1	LINDSEY	3231BNC	30 KIP ANCHOR SHACKLE	FS	A576
2	1	LINDSEY	3484/140	30 KIP HOT LINE LINK OE-OE	FS	A576
3	1			30 KIP POLYMER INSULATOR	PORC.	
4	1	LINDSEY	3340	30 KIP SOCKET Y-CLEVIS	DI	A536
5	1	LINDSEY	R-18293	30 KIP 3 BUNDLE YOKE PLATE	STL	A572
6	3	LINDSEY	3126	25 KIP "Y" CLEVIS-EYE	DI	A536
7	3	LINDSEY	1415/186	SUSPENSION CLAMP	AL	B26
8	3	PREFORMED	AR-0503	ARMOR ROD	AL	

REVISIONS		
REV.	DESCRIPTION	DATE
1	INITIAL DESIGN	1/3/2008

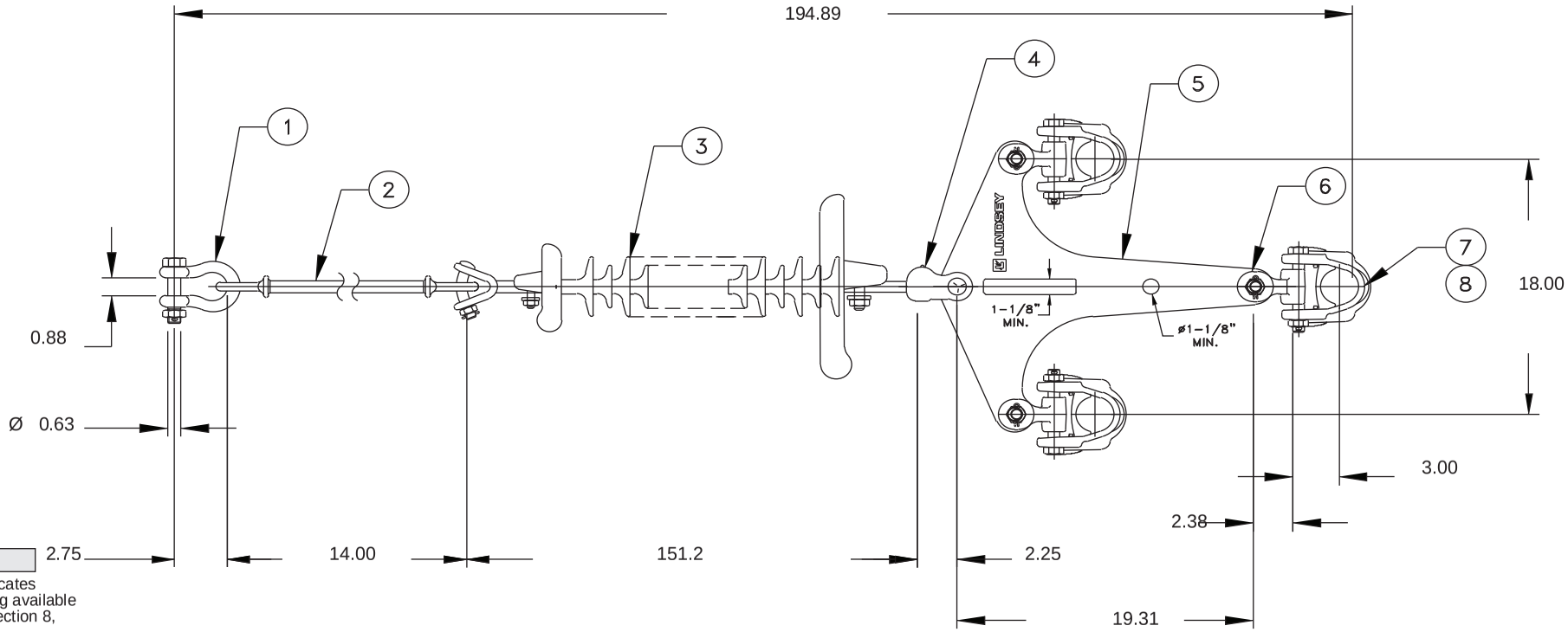

Tint block indicates alternate sizing available see catalog section 8, pages 30 - 35

6. SPECIFY ALL ARMOR RODS TO BE CORONA FREE.
5. BOLT-NUT-COTTER PIN (BNC) ON ALL STRAIGHT OR CURVED BOLTS.
4. ALL PARTS TO BE FABRICATED AND TESTED AS PER I.E.E.E.. SPECIFICATION C135.61
3. ALL COTTER KEYS ARE HUMPBACK STAINLESS STEEL (TYPE 304).
2. FINISH: ALL FERROUS PARTS ARE HOT DIPPED GALV. PER ASTM STD. A-123.
ALL FERROUS FASTENERS ARE HOT DIPPED GALV. PER ASTM STD. A-153.
1. ALL DIMENSIONS ARE IN INCHES

DESIGNED BY	DATE	LINDSEY MANUFACTURING CO.		
PL	1/3/2008	500kV 30 KIP 3-BUNDLE I-STRING SUSPENSION ASSY. NCI. INSUL.		
JOB. REF.		PROJECT	DWG	REV
CATALOG REFERENCE			30K-3C-I-NCI	1

Due to variations in conductor size, insulator design, etc., not all assemblies have been corona tested at all voltage levels. Please confirm with the factory at time of quotation.

ITEM	QTY.	VENDOR	PT. NO.	DESCRIPTION	MATL.	ASTM
1	2	LINDSEY	3252BNC	60 KIP ANCHOR SHACKLE	FS	A576
2	1	LINDSEY	3484/ 651	30 KIP HOT LINE LINK OE-OE	FS	A576
3	1	LINDSEY	3484/ 151	30 KIP HOT LINE LINK OE-OE	FS	A576
4	2			30 KIP POLYMER INSULATOR	NCI	
5	2	LINDSEY	3340	30 KIP SOCKET Y-CLEVIS	DI	A536
6	1	LINDSEY	R-18177	50 KIP YOKE PLATE 3-COND.	STL	A572
7	3	LINDSEY	3126	25 KIP "Y" CLEVIS-EYE	DI	A536
8	3	LINDSEY	1415/248	SUSPENSION CLAMP	AL	B26
9	3	PREFORMED	AR-0511	ARMOR RODS	AL	

REVISIONS		
REV.	DESCRIPTION	DATE
1	INITIAL DESIGN	1/3/2010

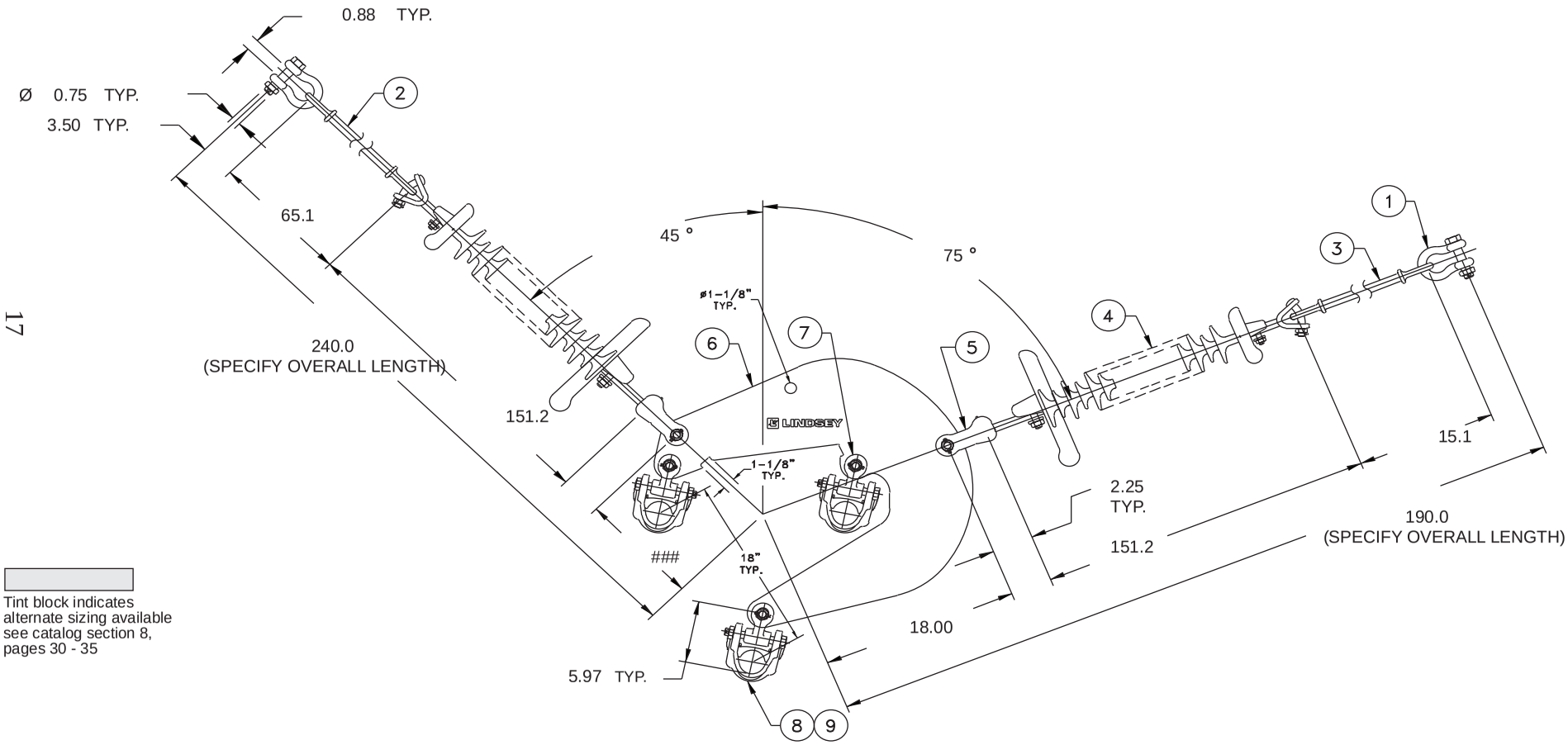

Tint block indicates alternate sizing available see catalog section 8, pages 30 - 35

6. SPECIFY ALL ARMOR RODS TO BE CORONA FREE.
5. BOLT-NUT-COTTER PIN (BNC) ON ALL STRAIGHT OR CURVED BOLTS.
4. ALL PARTS TO BE FABRICATED AND TESTED AS PER I.E.E.E.. SPECIFICATION C135.61
3. ALL COTTER KEYS ARE HUMPBACK STAINLESS STEEL (TYPE 304) .
2. FINISH: ALL FERROUS PARTS ARE HOT DIPPED GALV. PER ASTM STD. A-123 .
ALL FERROUS FASTENERS ARE HOT DIPPED GALV. PER ASTM STD. A-153 .
1. ALL DIMENSIONS ARE IN INCHES.

DESIGNED BY	DATE	LINDSEY MANUFACTURING CO.		
PL	1/3/2010	500kV 30 KIP VEE STRING ANGLE NCI INSULATOR ASSY.		
JOB. REF.		PROJECT	DWG	REV
CATALOG REFERENCE			30K-3C-AV-NCI	1

Due to variations in conductor size, insulator design, etc., not all assemblies have been corona tested at all voltage levels. Please confirm with the factory at time of quotation.

ITEM	QTY.	VENDOR	PT. NO.	DESCRIPTION	MATL.	ASTM
1	2	LINDSEY	3231BNC	30 KIP ANCHOR SHACKLE	FS	A576
2	2	LINDSEY	3484/ 407	30 KIP HOT LINE LINK	FS	A576
3	2			30 KIP POLYMER ILSULATOR	NCI	
4	2	LINDSEY	3340	30 KIP SOCKET CLEVIS	DI	A536
5	1	LINDSEY	R-6203	30 KIP YOKE PLATE TRI	STL	A572
6	3	LINDSEY	3126	25 KIP "Y" CLEVIS-EYE	DI	A536
7	3	LINDSEY	1415/248	SUSPENSION CLAMP	AL	B26
8	3	PREFORMED	AR-0511	ARMOR RODS	AL	

REVISIONS		
REV.	DESCRIPTION	DATE
1	INITIAL DESIGN	1/3/2010

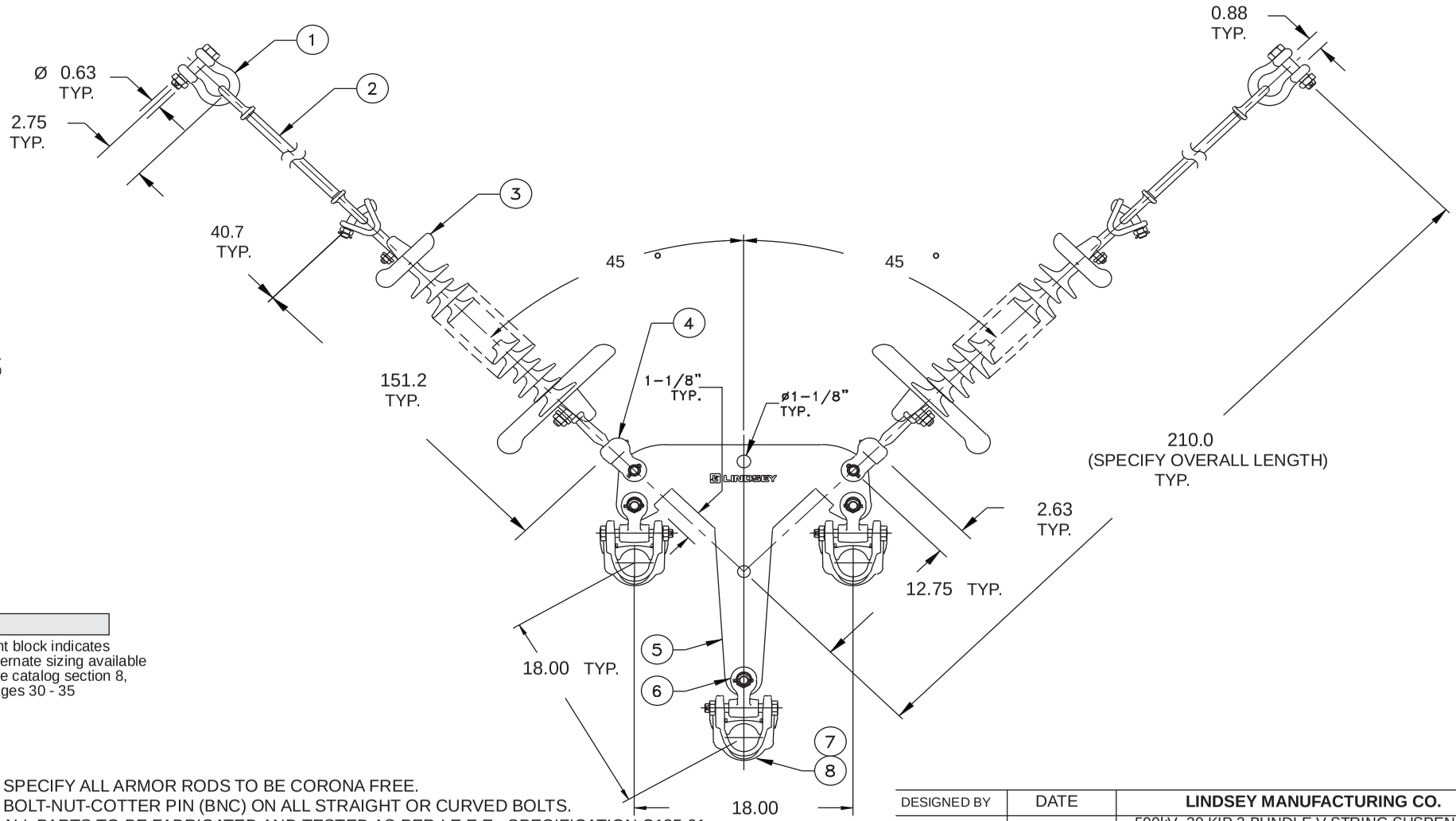

Tint block indicates alternate sizing available see catalog section 8, pages 30 - 35

6. SPECIFY ALL ARMOR RODS TO BE CORONA FREE.
5. BOLT-NUT-COTTER PIN (BNC) ON ALL STRAIGHT OR CURVED BOLTS.
4. ALL PARTS TO BE FABRICATED AND TESTED AS PER I.E.E.E.. SPECIFICATION C135.61
3. ALL COTTER KEYS ARE HUMPBACK STAINLESS STEEL (TYPE 304).
2. FINISH: ALL FERROUS PARTS ARE HOT DIPPED GALV. PER ASTM STD. A-123.
ALL FERROUS FASTENERS ARE HOT DIPPED GALV. PER ASTM STD. A-153.
1. ALL DIMENSIONS ARE IN INCHES.

DESIGNED BY	DATE	LINDSEY MANUFACTURING CO.		
PL	1/3/2010	500kV 30 KIP 3-BUNDLE V-STRING SUSPENSION ASSY. NCI. INSUL.		
JOB. REF.		PROJECT	DWG	REV
CATALOG REFERENCE			30K-3C-V-NCI	1

Due to variations in conductor size, insulator design, etc., not all assemblies have been corona tested at all voltage levels. Please confirm with the factory at time of quotation.

ITEM	QTY.	VENDOR	PT. NO.	DESCRIPTION	MATL.	ASTM
1	2	LINDSEY	3262BNC	60 KIP ANCHOR SHACKLE	FS	A576
2	1	LINDSEY	3484/ 285	30 KIP HOT LINE LINK	FS	A576
3	1	LINDSEY	3484/ 385	30 KIP HOT LINE LINK	FS	A576
4	2			30 KIP POLYMER ILSULATOR	NCI	
5	2	LINDSEY	3340	30 KIP SOCKET CLEVIS	DI	A536
6	1	LINDSEY	R-6203	30 KIP YOKE PLATE TRI	STL	A572
7	3	LINDSEY	3126	25 KIP "Y" CLEVIS-EYE	DI	A536
8	3	LINDSEY	1415/214	SUSPENSION CLAMP	AL	B26
9	3	PREFORMED	AR-0509	ARMOR RODS	AL	

REVISIONS		
REV.	DESCRIPTION	DATE
1	INITIAL DESIGN	1/3/2010

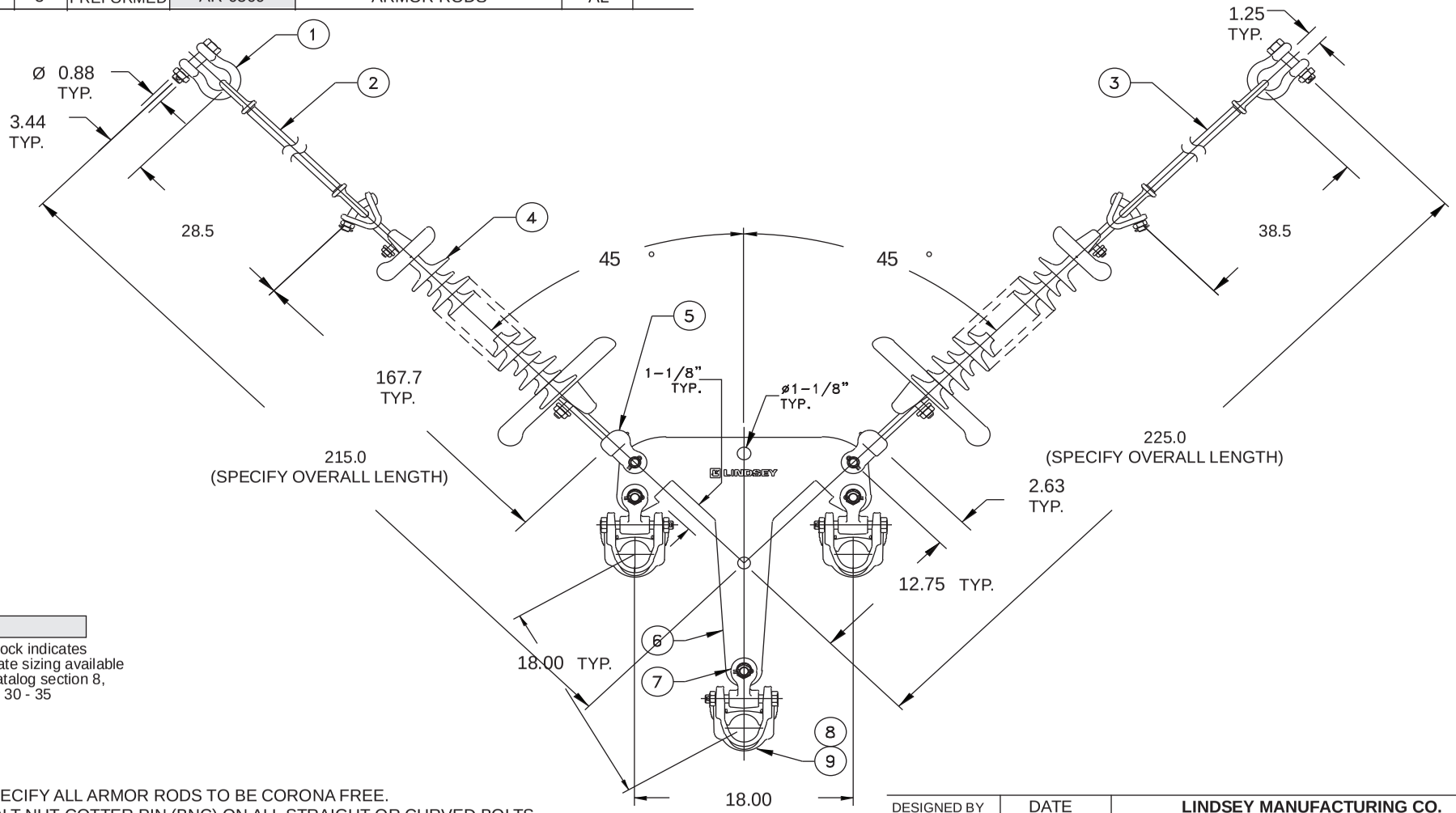

Tint block indicates alternate sizing available see catalog section 8, pages 30 - 35

6. SPECIFY ALL ARMOR RODS TO BE CORONA FREE.
5. BOLT-NUT-COTTER PIN (BNC) ON ALL STRAIGHT OR CURVED BOLTS.
4. ALL PARTS TO BE FABRICATED AND TESTED AS PER I.E.E.E.. SPECIFICATION C135.61
3. ALL COTTER KEYS ARE HUMPBACK STAINLESS STEEL (TYPE 304) .
2. FINISH: ALL FERROUS PARTS ARE HOT DIPPED GALV. PER ASTM STD. A-123 .
ALL FERROUS FASTENERS ARE HOT DIPPED GALV. PER ASTM STD. A-153 .
1. ALL DIMENSIONS ARE IN INCHE S

DESIGNED BY	DATE	LINDSEY MANUFACTURING CO.		
PL	1/3/2010	500kV 30 KIP 3-BUNDLE V-STRING SUSPENSION ASSY. NCI. INSUL.		
JOB. REF.		PROJECT	DWG	REV
CATALOG REFERENCE			30K-3C-UV-NCI	1

Due to variations in conductor size, insulator design, etc., not all assemblies have been corona tested at all voltage levels. Please confirm with the factory at time of quotation.

ITEM	QTY.	VENDOR	PT. NO.	DESCRIPTION	MATL.	ASTM
1	1	LINDSEY	3262BNC	60 KIP ANCHOR SHACKLE	FS	A576
2	1	LINDSEY	3487/140	50 KIP HOT LINE LINK OE-OE	FS	A576
3	1			50 KIP POLYMER INSULATOR	PORC.	
4	1	LINDSEY	3344	50 KIP SOCKET CLEVIS	DI	A536
5	1	LINDSEY	R-18293	50 KIP 3 BUNDLE YOKE PLATE	STL	A572
6	3	LINDSEY	3126	25 KIP "Y" CLEVIS-EYE	DI	A536
7	3	LINDSEY	1415/186	SUSPENSION CLAMP	AL	B26
8	3	PREFORMED	AR-0506	ARMOR RODS	AL	

REVISIONS		
REV.	DESCRIPTION	DATE
1	INITIAL DESIGN	1/3/2008

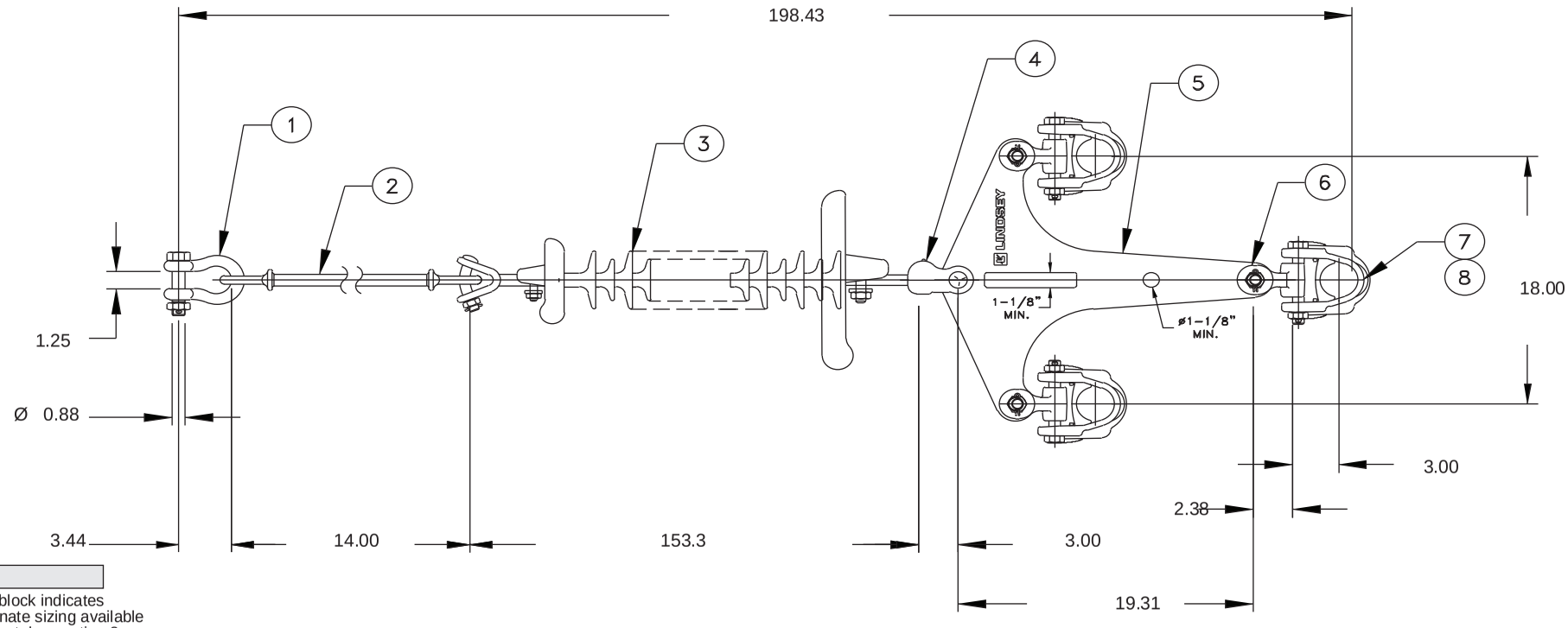

Tint block indicates alternate sizing available see catalog section 8, pages 30 - 35

6. SPECIFY ALL ARMOR RODS TO BE CORONA FREE.
5. BOLT-NUT-COTTER PIN (BNC) ON ALL STRAIGHT OR CURVED BOLTS.
4. ALL PARTS TO BE FABRICATED AND TESTED AS PER I.E.E.E.. SPECIFICATION C135.61
3. ALL COTTER KEYS ARE HUMPBACK STAINLESS STEEL (TYPE 304).
2. FINISH: ALL FERROUS PARTS ARE HOT DIPPED GALV. PER ASTM STD. A-123.
ALL FERROUS FASTENERS ARE HOT DIPPED GALV. PER ASTM STD. A-153
1. ALL DIMENSIONS ARE IN INCHES

DESIGNED BY	DATE	LINDSEY MANUFACTURING CO.		
PL	1/3/2010	500kV 50 KIP 3-BUNDLE I-STRING SUSPENSION ASSY. NCI. INSUL.		
JOB. REF.		PROJECT	DWG	REV
CATALOG REFERENCE			50K-3C-I-NCI	1

Due to variations in conductor size, insulator design, etc., not all assemblies have been corona tested at all voltage levels. Please confirm with the factory at time of quotation.

ITEM	QTY.	VENDOR	PT. NO.	DESCRIPTION	MATL.	ASTM
1	2	LINDSEY	3262BNC	60 KIP ANCHOR SHACKLE	FS	A576
2	1	LINDSEY	3487/ 144	50 KIP HOT LINE LINK OE-OE	FS	A576
3	1	LINDSEY	3487/ 344	50 KIP HOT LINE LINK OE-OE	FS	A576
4	2			50 KIP POLYMER INSULATOR		
5	2	LINDSEY	3181BNC	50 KIP SOCKET Y-CLEVIS	DI	A536
6	1	LINDSEY	R-18177	50 KIP YOKE PLATE 3-COND.	STL	A572
7	3	LINDSEY	3126	25 KIP "Y" CLEVIS-EYE	DI	A536
8	3	LINDSEY	1415/204	SUSPENSION CLAMP	AL	B26
9	3	PREFORMED	AR-0508	ARMOR RODS	AL	

REVISIONS		
REV.	DESCRIPTION	DATE
1	INITIAL DESIGN	1/3/2010

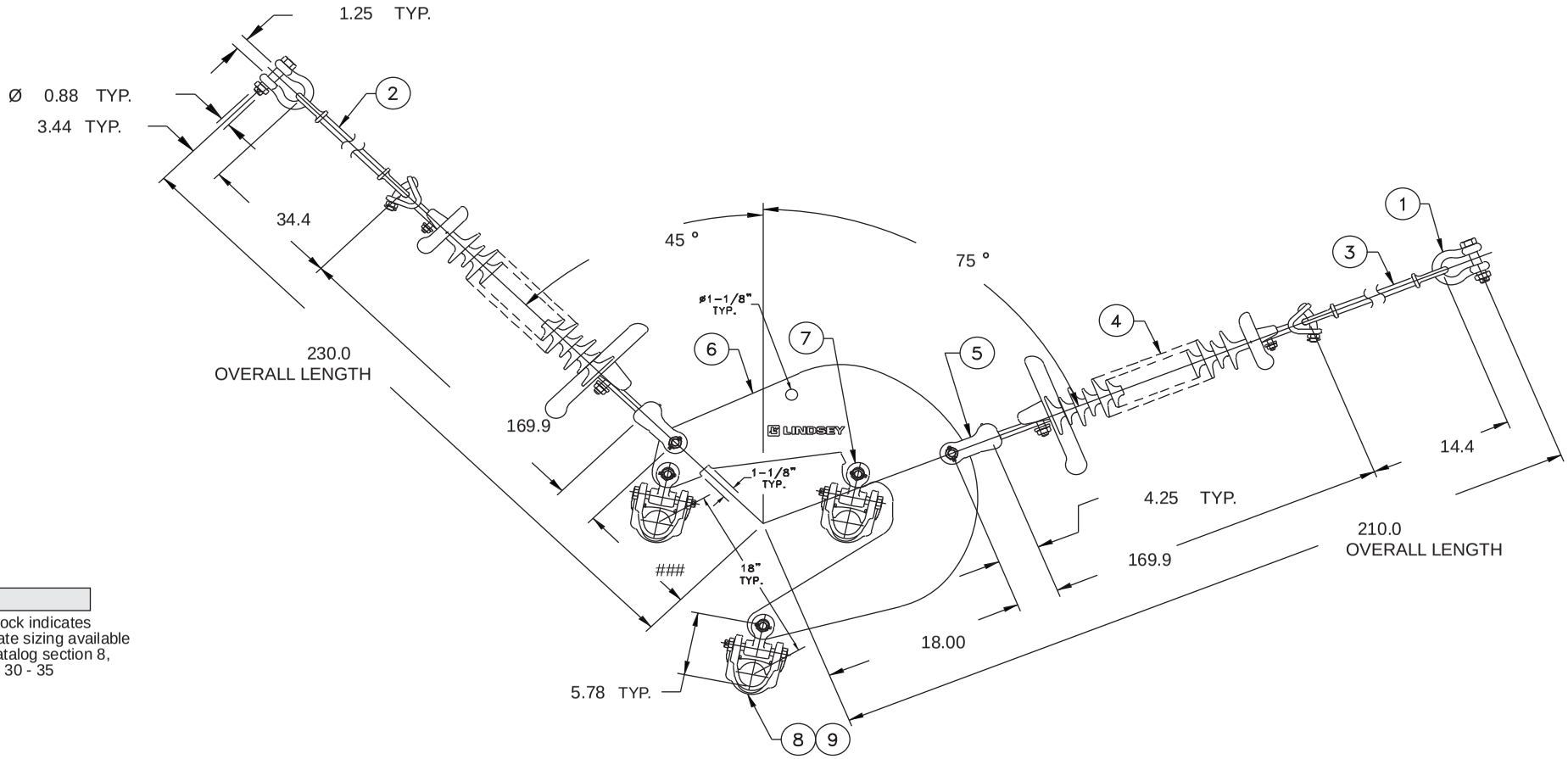

Tint block indicates alternate sizing available see catalog section 8, pages 30 - 35

6. SPECIFY ALL ARMOR RODS TO BE CORONA FREE.
5. BOLT-NUT-COTTER PIN (BNC) ON ALL STRAIGHT OR CURVED BOLTS.
4. ALL PARTS TO BE FABRICATED AND TESTED AS PER I.E.E.E.. SPECIFICATION C135.61
3. ALL COTTER KEYS ARE HUMPBACK STAINLESS STEEL (TYPE 304) .
2. FINISH: ALL FERROUS PARTS ARE HOT DIPPED GALV. PER ASTM STD. A-123 .
ALL FERROUS FASTENERS ARE HOT DIPPED GALV. PER ASTM STD. A-153 .
1. ALL DIMENSIONS ARE IN INCHE S

DESIGNED BY	DATE	LINDSEY MANUFACTURING CO.		
PL	1/3/2010	500kV 50 KIP VEE STRING ANGLE NCI INSULATOR ASSY.		
JOB. REF.		PROJECT	DWG	REV
CATALOG REFERENCE			50K-3C-AV-NCI	1

Due to variations in conductor size, insulator design, etc., not all assemblies have been corona tested at all voltage levels. Please confirm with the factory at time of quotation.

ITEM	QTY.	VENDOR	PT. NO.	DESCRIPTION	MATL.	ASTM
1	2	LINDSEY	3262BNC	60 KIP ANCHOR SHACKLE	FS	A576
2	2	LINDSEY	3487/ 241	50 KIP HOT LINE LINK	FS	A576
3	2	LINDSEY	3344	50 KIP SOCKET Y-CLEVIS	DI	536
4	2	LINDSEY	502-SC1410-YK	50 KIP POLYMER INSULATOR		
5	1	LINDSEY	R-6203	50 KIP YOKE PLATE TRI	STL	A572
6	3	LINDSEY	3126	25 KIP "Y" CLEVIS-EYE	DI	A536
7	3	LINDSEY	1415/248	SUSPENSION CLAMP	AL	B26
8	3	PREFORMED	AR-0511	ARMOR RODS	AL	

REVISIONS		
REV.	DESCRIPTION	DATE
1	INITIAL DESIGN	1/3/2010

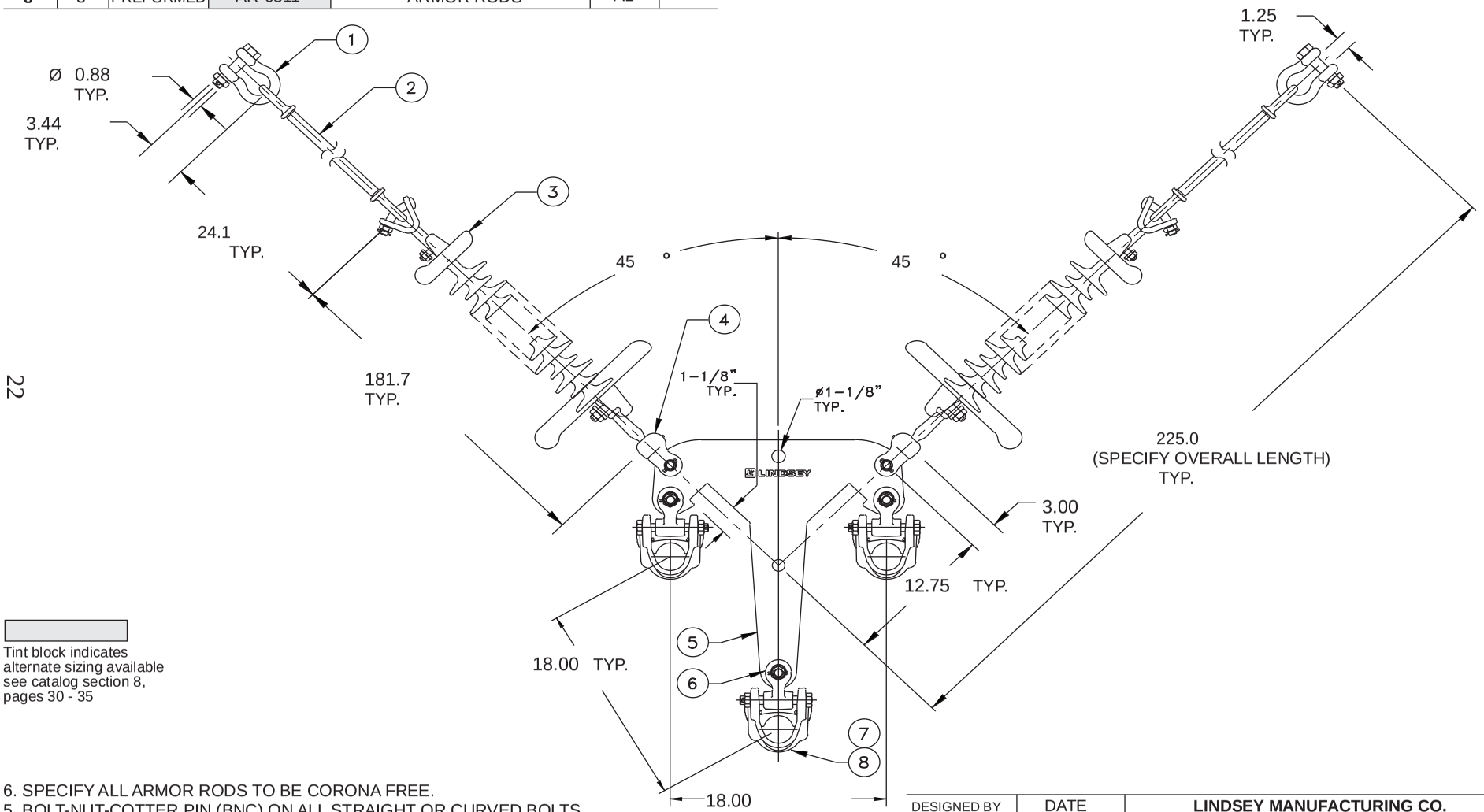

Tint block indicates alternate sizing available see catalog section 8, pages 30 - 35

6. SPECIFY ALL ARMOR RODS TO BE CORONA FREE.
5. BOLT-NUT-COTTER PIN (BNC) ON ALL STRAIGHT OR CURVED BOLTS.
4. ALL PARTS TO BE FABRICATED AND TESTED AS PER I.E.E.E.. SPECIFICATION C135.61
3. ALL COTTER KEYS ARE HUMPBACK STAINLESS STEEL (TYPE 304).
2. FINISH: ALL FERROUS PARTS ARE HOT DIPPED GALV. PER ASTM STD. A-123.
ALL FERROUS FASTENERS ARE HOT DIPPED GALV. PER ASTM STD. A-153.
1. ALL DIMENSIONS ARE IN INCHES.

DESIGNED BY	DATE	LINDSEY MANUFACTURING CO.		
PL	1/3/2010	500kV 50 KIP 3-BUNDLE V-STRING SUSPENSION ASSY. NCI. INSUL.		
JOB. REF.		PROJECT	DWG	REV
CATALOG REFERENCE			50K-3C-V-NCI	1

Due to variations in conductor size, insulator design, etc., not all assemblies have been corona tested at all voltage levels. Please confirm with the factory at time of quotation.

ITEM	QTY.	VENDOR	PT. NO.	DESCRIPTION	MATL.	ASTM
1	2	LINDSEY	3252BNC	60 KIP ANCHOR SHACKLE	FS	A576
2	1	LINDSEY	3487/ 289	50 KIP HOT LINE LINK	FS	A576
3	1	LINDSEY	3487/ 489	50 KIP HOT LINE LINK	FS	A576
4	2			50 KIP POLYMER INSULATOR		
5	2	LINDSEY	3344	50 KIP SOCKET Y-CLEVIS	DI	A536
6	1	LINDSEY	R-6203	50 KIP YOKE PLATE TRI	STL	A572
7	3	LINDSEY	3126	25 KIP "Y" CLEVIS-EYE	DI	A536
8	3	LINDSEY	1415/204	SUSPENSION CLAMP	AL	B26
9	3	PREFORMED	AR-0508	ARMOR RODS	AL	

REVISIONS		
REV.	DESCRIPTION	DATE
1	INITIAL DESIGN	1/3/2010

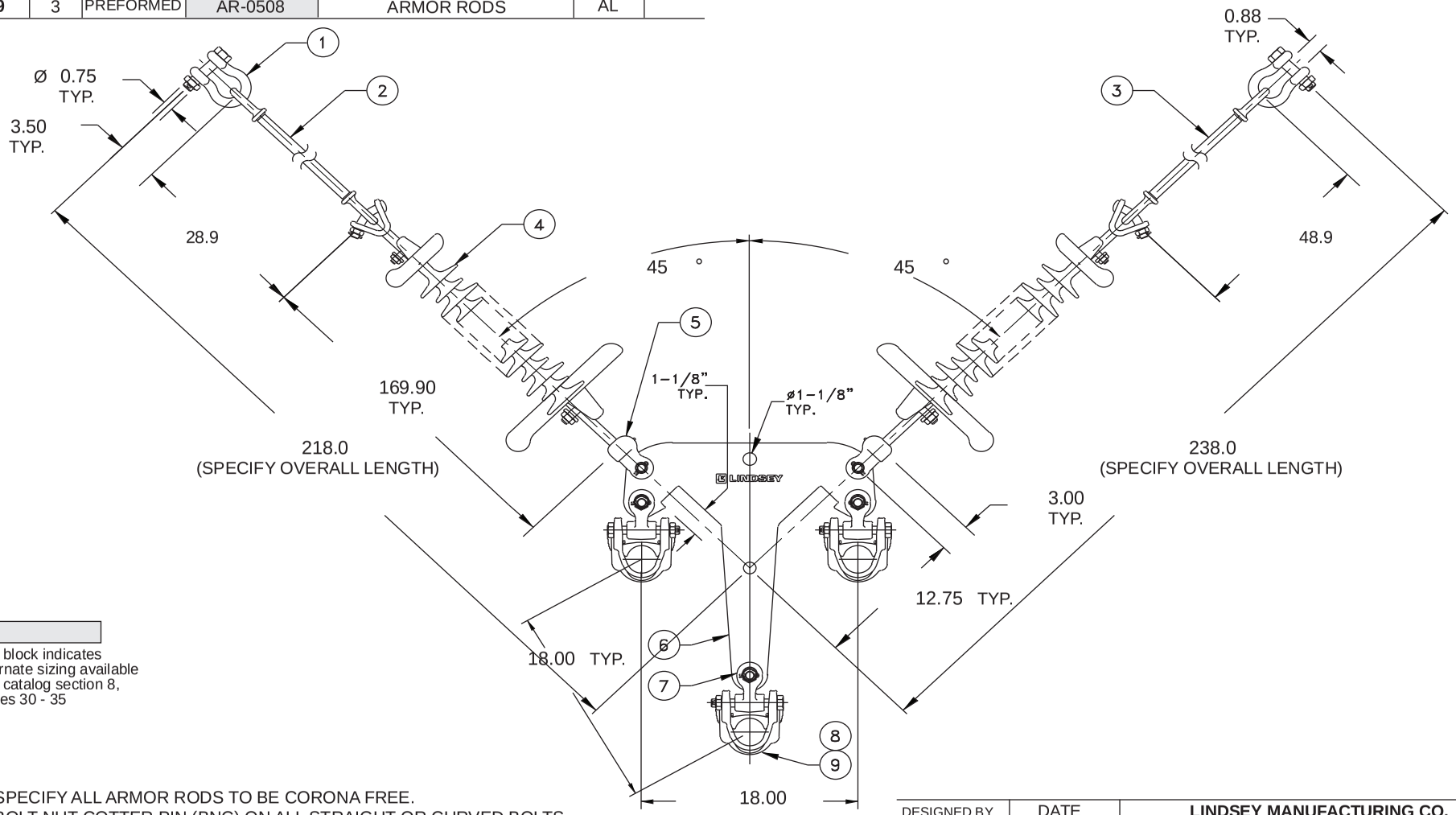

Tint block indicates alternate sizing available see catalog section 8, pages 30 - 35

6. SPECIFY ALL ARMOR RODS TO BE CORONA FREE.
5. BOLT-NUT-COTTER PIN (BNC) ON ALL STRAIGHT OR CURVED BOLTS.
4. ALL PARTS TO BE FABRICATED AND TESTED AS PER I.E.E.E.. SPECIFICATION C135.61
3. ALL COTTER KEYS ARE HUMPBACK STAINLESS STEEL (TYPE 304).
2. FINISH: ALL FERROUS PARTS ARE HOT DIPPED GALV. PER ASTM STD. A-123.
ALL FERROUS FASTENERS ARE HOT DIPPED GALV. PER ASTM STD. A-153.
1. ALL DIMENSIONS ARE IN INCHES.

DESIGNED BY	DATE	LINDSEY MANUFACTURING CO.		
PL	1/3/2010	500kV 50 KIP 3-BUNDLE V-STRING SUSPENSION ASSY. NCI. INSUL.		
JOB. REF.		PROJECT	DWG	REV
CATALOG REFERENCE			50K-3C-UV-NCI	1

Due to variations in conductor size, insulator design, etc., not all assemblies have been corona tested at all voltage levels. Please confirm with the factory at time of quotation.

ITEM	QTY.	VENDOR	PT. NO.	DESCRIPTION	MATL.	ASTM
1	4	LINDSEY	3264BNC	102 KIP ANCHOR SHACKLE	F.S.	A576
2	1	LINDSEY	3614/ 250	100 KIP EXTENSION STRAP	STL.	A36
3	1	LINDSEY	3406	110 KIP CHAIN LINK	F.S.	A576
4	3			30 KIP POLYMER INSULATOR	NCI	
5	1	LINDSEY	R-20510	100 KIP TRIPLE YOKE PLATE	STL.	A572
6	2	LINDSEY	3341SN	30 KIP SOCKET Y-CLEVIS	D.I.	A536
7	1	LINDSEY	3340SN	30 KIP SOCKET Y-CLEVIS	D.I.	A536
8	1	LINDSEY	R-20511CB	150 KIP TRIPLE YOKE PLATE	STL.	A572
9	7	LINDSEY	3231BNC	30 KIP ANCHOR SHACKLE	F.S.	A576
10	1	LINDSEY	7630/210	30 KIP STRAP LINK ASSY.	STL.	A36
11	1	LINDSEY	R-18203	50 KIP ADJ. YOKEPLATE	STL	A572
12	2	LINDSEY	R-19607	CORONA RING	AL	B241

REVISIONS		
REV.	DESCRIPTION	DATE
1	INITIAL DESIGN	1/3/2010

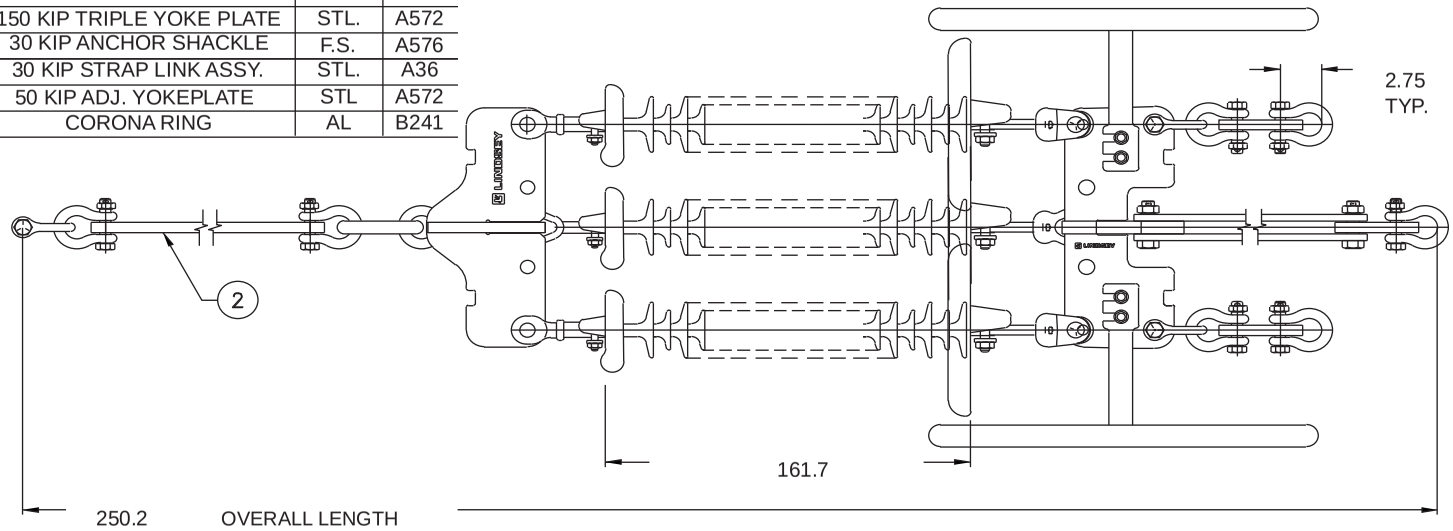

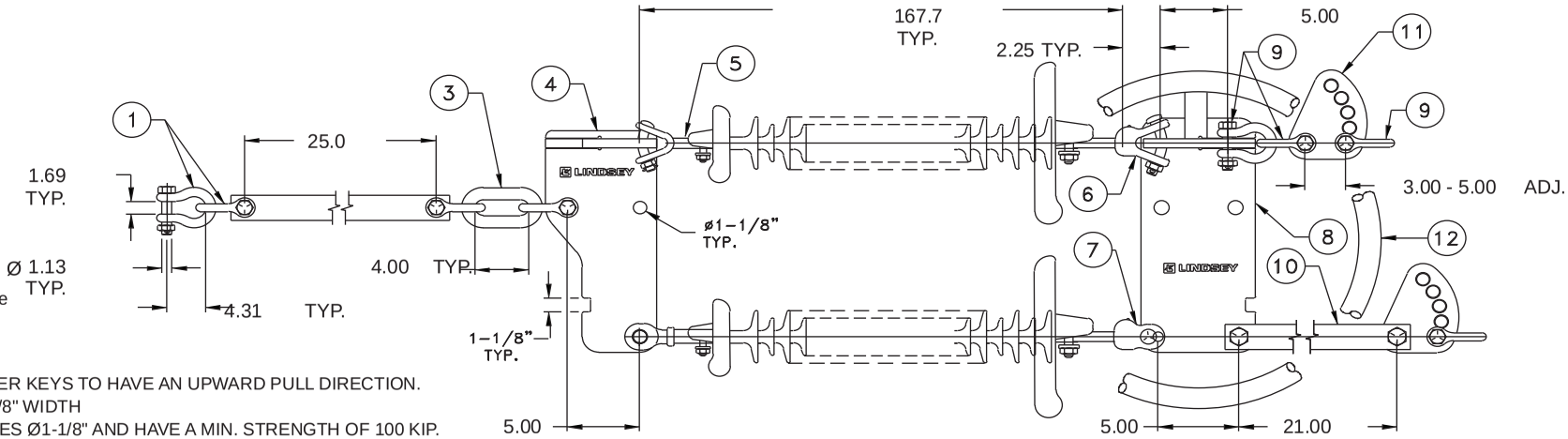

Tint block indicates alternate sizing available see catalog section 8, pages 30 - 35

9. ALL SOCKET COTTER KEYS TO HAVE AN UPWARD PULL DIRECTION.
8. ALL SLOTS MIN 1-1/8" WIDTH
7. ALL WORKING HOLES Ø1-1/8" AND HAVE A MIN. STRENGTH OF 100 KIP.
6. ALL HOLES WITH CURVED BOLTS TO HAVE 1/8" MIN. CHAMFER BOTH SIDES.
5. BOLT-NUT-COTTER PIN (BNC) ON ALL STRIAIGHT OR CURVED BOLTS.
4. ALL PARTS TO BE FABRICATED AND TESTED AS PER I.E.E.E.. SPECIFICATION C135.61
3. ALL COTTER KEYS ARE HUMPBACK STAINLESS STEEL (TYPE 304).
2. FINISH: ALL FERROUS PARTS ARE HOT DIPPED GALV. PER ASTM STD. A-123.
ALL FERROUS FASTENERS ARE HOT DIPPED GALV. PER ASTM STD. A-153.
1. ALL DIMENSIONS ARE IN INCHES

DESIGNED BY	DATE	LINDSEY MANUFACTURING CO.		
PL	1/3/2010	500kV 30 KIP 3-BUNDLE, 3-CONDUCTOR DEAD-END NCI INSULATOR ASSY.		
JOB. REF.		PROJECT	DWG	REV
CATALOG REFERENCE			90K-3C-DE-L-NCI	1

Due to variations in conductor size, insulator design, etc., not all assemblies have been corona tested at all voltage levels. Please confirm with the factory at time of quotation.

ITEM	QTY.	VENDOR	PT. NO.	DESCRIPTION	MATL.	ASTM
1	2	LINDSEY	3264BNC	102 KIP ANCHOR SHACKLE	F.S.	A576
2						
3						
4	3			30 KIP POLYMER INSULATOR	NCI	
5	1	LINDSEY	R-20510	100 KIP TRIPLE YOKE PLATE	STL.	A572
6	2	LINDSEY	3341SN	30 KIP SOCKET Y-CLEVIS	D.I.	A536
7	1	LINDSEY	3340SN	30 KIP SOCKET Y-CLEVIS	D.I.	A536
8	1	LINDSEY	R-20511CB	150 KIP TRIPLE YOKE PLATE	STL.	A572
9	7	LINDSEY	3231BNC	30 KIP ANCHOR SHACKLE	F.S.	A576
10	1	LINDSEY	7630/210	30 KIP STRAP LINK ASSY.	STL.	A36
11	1	LINDSEY	R-18203	50 KIP ADJ. YOKE PLAT	STL	A572
12	2	LINDSEY	R-19607	CORONA RING	AL	B241

REVISIONS		
REV.	DESCRIPTION	DATE
1	INITIAL DESIGN	1/3/2010

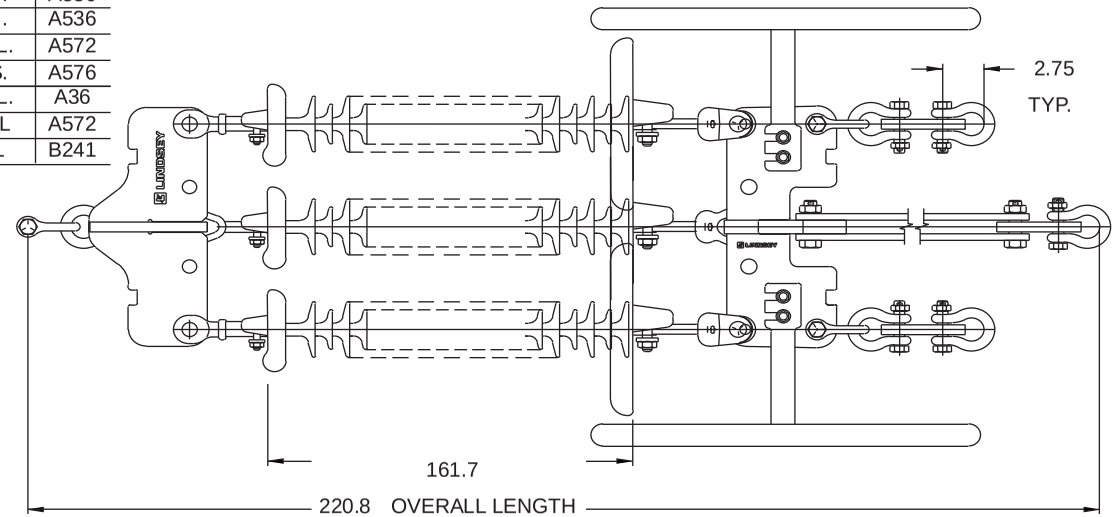

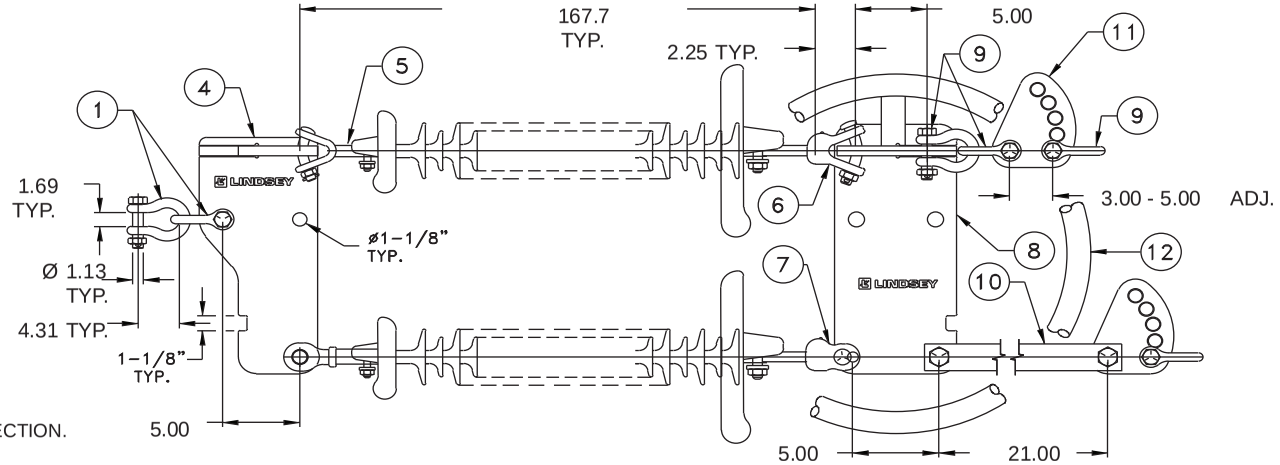

Tint block indicates alternate sizing available see catalog section 8, pages 30 - 35

9. ALL SOCKET COTTER KEYS TO HAVE AN UPWARD PULL DIRECTION.
8. ALL SLOTS MIN 1-1/8" WIDTH
7. ALL WORKING HOLES Ø1-1/8" AND HAVE A MIN. STRENGTH OF 100 KIP.
6. ALL HOLES WITH CURVED BOLTS TO HAVE 1/8" MIN. CHAMFER BOTH SIDES.
5. BOLT-NUT-COTTER PIN (BNC) ON ALL STRIAIGHT OR CURVED BOLTS.
4. ALL PARTS TO BE FABRICATED AND TESTED AS PER I.E.E.E.. SPECIFICATION C135.61
3. ALL COTTER KEYS ARE HUMPBACK STAINLESS STEEL (TYPE 304).
2. FINISH: ALL FERROUS PARTS ARE HOT DIPPED GALV. PER ASTM STD. A-123.
ALL FERROUS FASTENERS ARE HOT DIPPED GALV. PER ASTM STD. A-153.
1. ALL DIMENSIONS ARE IN INCHE S

DESIGNED BY	DATE	LINDSEY MANUFACTURING CO.		
PL	1/3/2010	500kV 30 KIP 3-BUNDLE, 3-CONDUCTOR DEAD-END NCI INSULATOR ASSY. (ALT.1)		
JOB. REF.		PROJECT	DWG	REV
CATALOG REFERENCE			90K-3C-DE-S-NCI	1

Due to variations in conductor size, insulator design, etc., not all assemblies have been corona tested at all voltage levels. Please confirm with the factory at time of quotation.

ITEM	QTY.	VENDOR	PT. NO.	DESCRIPTION	MATL.	ASTM
1	4	LINDSEY	3267BNC	168 KIP ANCHOR SHACKLE	F.S.	A576
2	1	LINDSEY	R7456/ 400	150 KIP EXTENSION STRAP	STL.	A36
3	1	LINDSEY	3408	200 KIP CHAIN LINK	F.S.	A576
4	1	LINDSEY	R-6287	150 KIP TRIPLE YOKE PLATE	STL.	A572
5	3			50 KIP POLYMER INSULATOR	NCI	
6	2	LINDSEY	3345	50 KIP SOCKET Y-CLEVIS	D.I.	A536
7	1	LINDSEY	3344	50 KIP SOCKET Y-CLEVIS	D.I.	A536
8	1	LINDSEY	R-20511CB	150 KIP TRIPLE YOKE PLATE	STL.	A572
9	7	LINDSEY	3262BNC	60 KIP ANCHOR SHACKLE	F.S.	A576
10	1	LINDSEY	R-10568/210	50 KIP STRAP LINK ASSY.	STL.	A36
11	1	LINDSEY	R-18203	50 KIP ADJ. YOKE PLATE	STL	A572
12	2	LINDSEY	R-19607	CORONA RING	AL	B241

REVISIONS		
REV.	DESCRIPTION	DATE
1	INITIAL DESIGN	1/3/2010

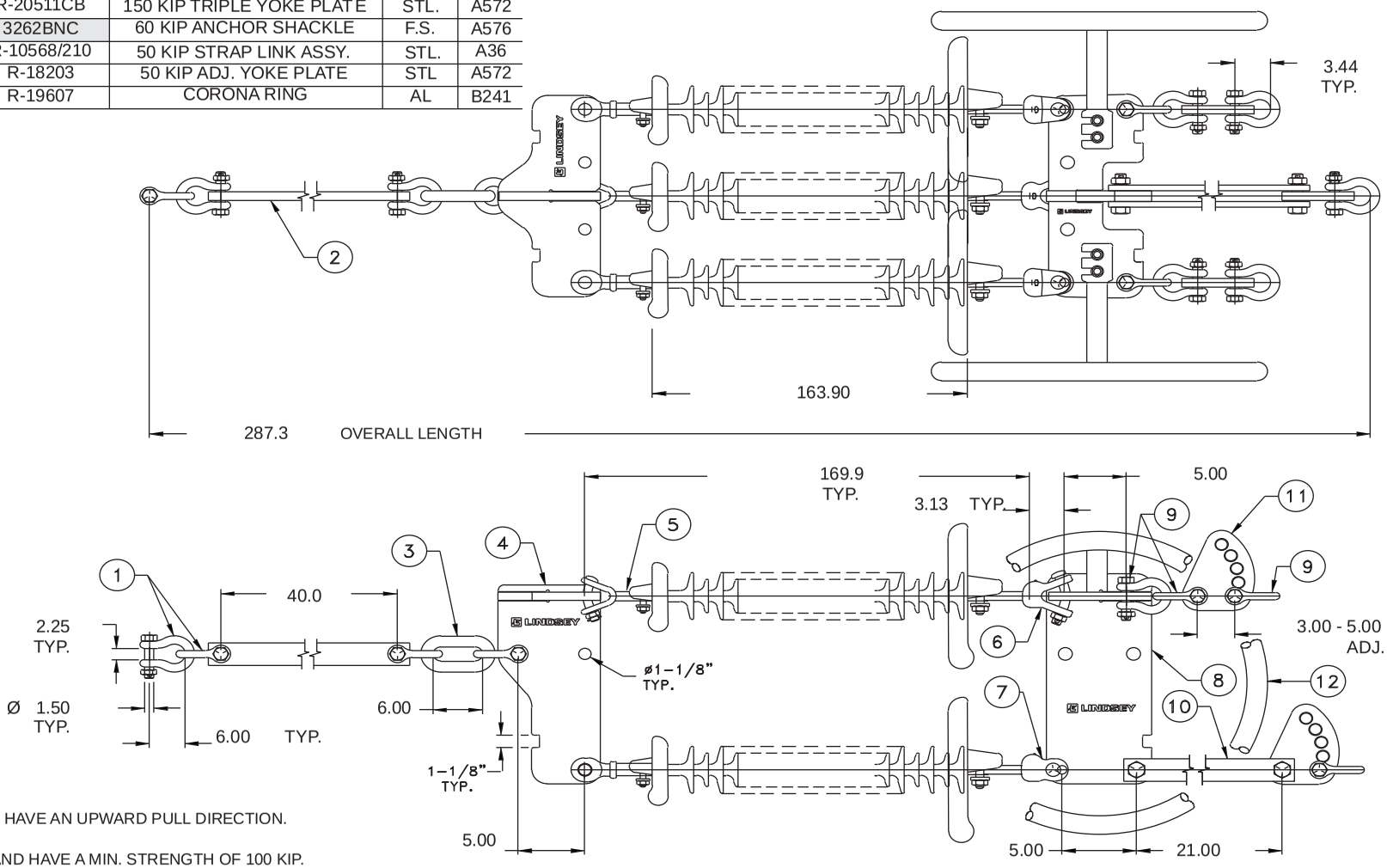

Tint block indicates alternate sizing available see catalog section 8, pages 30 - 35

9. ALL SOCKET COTTER KEYS TO HAVE AN UPWARD PULL DIRECTION.
8. ALL SLOTS MIN 1-1/8" WIDTH
7. ALL WORKING HOLES Ø1-1/8" AND HAVE A MIN. STRENGTH OF 100 KIP.
6. ALL HOLES WITH CURVED BOLTS TO HAVE 1/8" MIN. CHAMFER BOTH SIDES.
5. BOLT-NUT-COTTER PIN (BNC) ON ALL STRAIGHT OR CURVED BOLTS.
4. ALL PARTS TO BE FABRICATED AND TESTED AS PER I.E.E.E.. SPECIFICATION C135.61
3. ALL COTTER KEYS ARE HUMPBACK STAINLESS STEEL (TYPE 304).
2. FINISH: ALL FERROUS PARTS ARE HOT DIPPED GALV. PER ASTM STD. A-123.
ALL FERROUS FASTENERS ARE HOT DIPPED GALV. PER ASTM STD. A-153.
1. ALL DIMENSIONS ARE IN INCHES

DESIGNED BY	DATE	LINDSEY MANUFACTURING CO.		
PL	1/3/2010	500kV 50 KIP 3-BUNDLE, 3-CONDUCTOR DEAD-END NCI INSULATOR ASSY.		
JOB. REF.		PROJECT	DWG	REV
CATALOG REFERENCE			150K-3C-DE-L-NCI	1

Due to variations in conductor size, insulator design, etc., not all assemblies have been corona tested at all voltage levels. Please confirm with the factory at time of quotation.

ITEM	QTY.	VENDOR	PT. NO.	DESCRIPTION	MATL.	ASTM
1	2	LINDSEY	3267BNC	168 KIP ANCHOR SHACKLE	F.S.	A576
2						
3						
4	1	LINDSEY	R-6287	150 KIP TRIPLE YOKE PLATE	STL.	A572
5	3			50 KIP POLYMER INSULATOR	NCI	
6	2	LINDSEY	3345	50 KIP SOCKET Y-CLEVIS	D.I.	A536
7	1	LINDSEY	3344	50 KIP SOCKET Y-CLEVIS	D.I.	A536
8	1	LINDSEY	R-20511CB	150 KIP TRIPLE YOKE PLATE	STL.	A572
9	7	LINDSEY	3262BNC	60 KIP ANCHOR SHACKLE	F.S.	A576
10	1	LINDSEY	R-10568/210	50 KIP STRAP LINK ASSY.	STL.	A36
11	1	LINDSEY	R-18203	50 KIP ADJ. YOKE PLATE	STL	A572
12	2	LINDSEY	R-19607	CORONA RING	AL	B241

REVISIONS		
REV.	DESCRIPTION	DATE
1	INITIAL DESIGN	1/3/2010

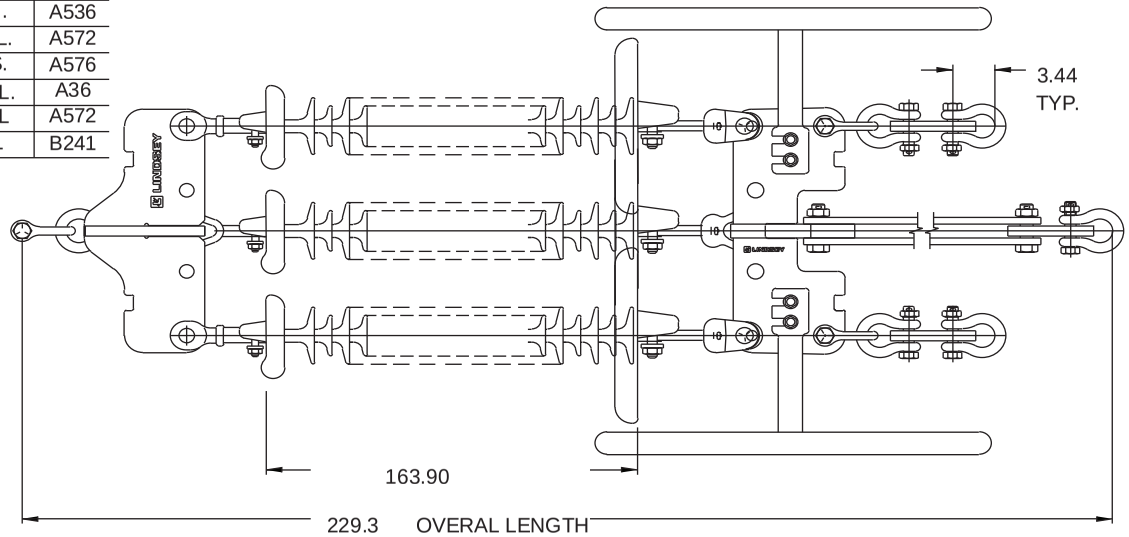

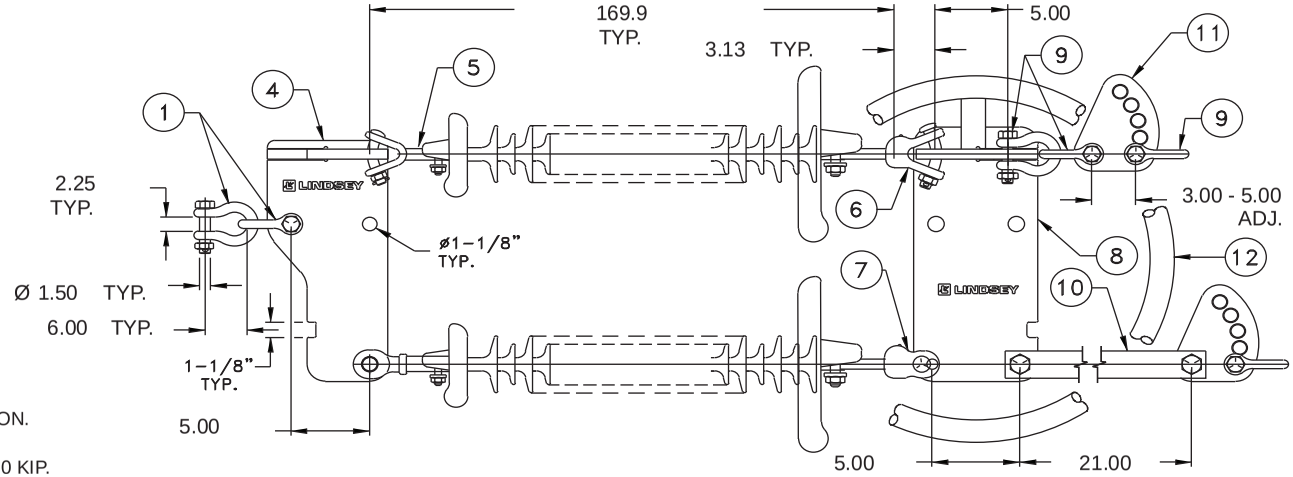

Tint block indicates alternate sizing available see catalog section 8, pages 30 - 35

9. ALL SOCKET COTTER KEYS TO HAVE AN UPWARD PULL DIRECTION.
8. ALL SLOTS MIN 1-1/8" WIDTH
7. ALL WORKING HOLES Ø1-1/8" AND HAVE A MIN. STRENGTH OF 100 KIP.
6. ALL HOLES WITH CURVED BOLTS TO HAVE 1/8" MIN. CHAMFER BOTH SIDES.
5. BOLT-NUT-COTTER PIN (BNC) ON ALL STRAIGHT OR CURVED BOLTS.
4. ALL PARTS TO BE FABRICATED AND TESTED AS PER I.E.E.E.. SPECIFICATION C135.61
3. ALL COTTER KEYS ARE HUMPBACK STAINLESS STEEL (TYPE 304).
2. FINISH: ALL FERROUS PARTS ARE HOT DIPPED GALV. PER ASTM STD. A-123.
ALL FERROUS FASTENERS ARE HOT DIPPED GALV. PER ASTM STD. A-153.
1. ALL DIMENSIONS ARE IN INCHES

DESIGNED BY	DATE	LINDSEY MANUFACTURING CO.	
PL	1/3/2010	500kV 50 KIP 3-BUNDLE, 3-CONDUCTOR DEAD-END NCI INSULATOR ASSY. (ALT.1)	
JOB. REF.		PROJECT	DWG	REV
CATALOG REFERENCE			150K-3C-DE-S-NCI	1

Due to variations in conductor size, insulator design, etc., not all assemblies have been corona tested at all voltage levels. Please confirm with the factory at time of quotation.

ITEM	QTY.	VENDOR	PT. NO.	DESCRIPTION	MATL.	ASTM
1	1	LINDSEY	3231BNC	30 KIP ANCHOR SHACKLE	FS	A576
2	1	LINDSEY	3484/ 120	30 KIP OVAL-EYE HOT LINE LINK	FS	A576
3	1			30 KIP POLYMER INSULATOR	NCI	
4	1	LINDSEY	3187BNC	30 KIP SOCKET CLEVIS EYE	FS	A576
5	1	LINDSEY	R-18289	10 KIP 3-COND. JUMPER YOKE	STL	A572
6	3	LINDSEY	1405	10 KIP SIDE OPENING CLAMP	STL	A572
7	1	LINDSEY	R-18176	300 lb. HOLD DOWN WEIGHT ASSY.	DI	A536
8	3	PREFORMED	AR-0509	ARMOR RODS	AL	

REVISIONS		
REV.	DESCRIPTION	DATE
1	INITIAL DESIGN	1/3/2010

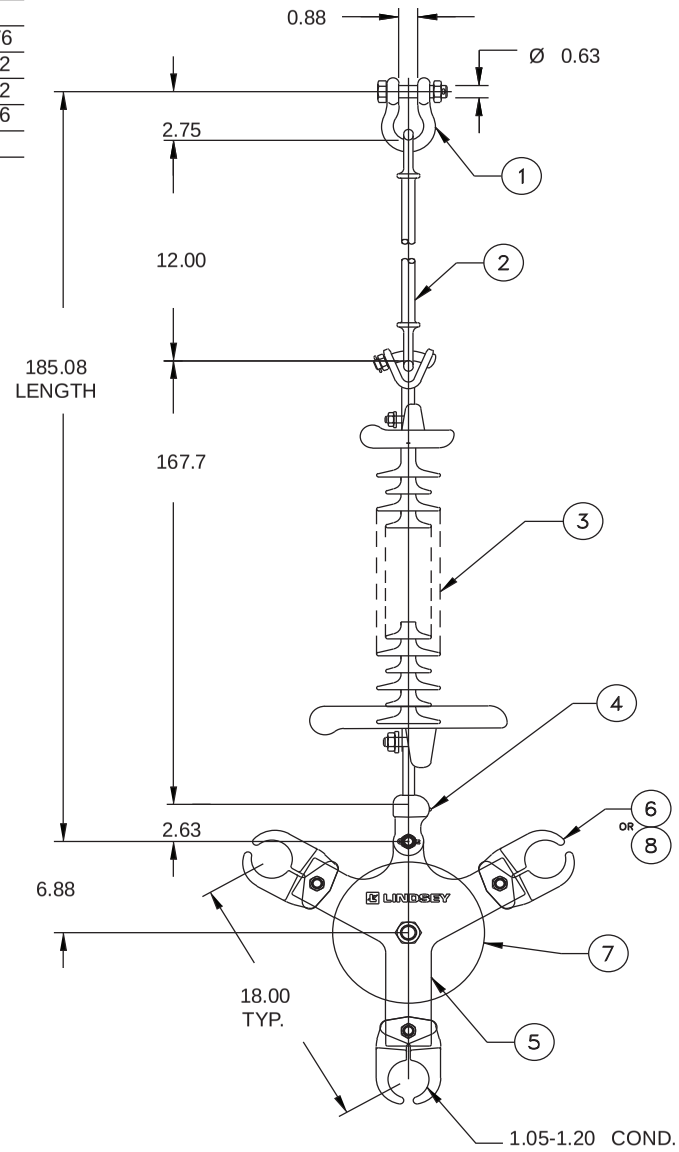

Tint block indicates alternate sizing available see catalog section 8, pages 30 - 35

6. SPECIFY ALL ARMOR RODS TO BE CORONA FREE.
5. BOLT-NUT-COTTER PIN (BNC) ON ALL STRAIGHT OR CURVED BOLTS.
4. ALL PARTS TO BE FABRICATED AND TESTED AS PER I.E.E.E.. SPECIFICATION C135.61
3. ALL COTTER KEYS ARE HUMPBACK STAINLESS STEEL (TYPE 304) .
2. FINISH: ALL FERROUS PARTS ARE HOT DIPPED GALV. PER ASTM STD. A-123 .
ALL FERROUS FASTENERS ARE HOT DIPPED GALV. PER ASTM STD. A-153 .
1. ALL DIMENSIONS ARE IN INCHE S

DESIGNED BY	DATE	LINDSEY MANUFACTURING CO.		
PL	1/3/2010	500kV 30 KIP I-STRING NCI INSULATOR JUMPER ASSY.		
JOB. REF.		PROJECT	DWG	REV
CATALOG REFERENCE			3OK-3C-J-NCI	1

Due to variations in conductor size, insulator design, etc., not all assemblies have been corona tested at all voltage levels. Please confirm with the factory at time of quotation.

ITEM	QTY.	VENDOR	PT. NO.	DESCRIPTION	MATL.	ASTM
1	1			POST POLYMER INSULATOR	NCI	
2	1	LINDSEY	R-20925	10 KIP 3-COND. YOKE PLATE	STL.	A572
3	3	LINDSEY	1404	CONDUCTOR SIDE CLAMP	AL	B26
4	3	PREFORMED	AAR 2950-E	ARMOR ROD	AL	

REVISIONS		
REV.	DESCRIPTION	DATE
1	INITIAL DESIGN	1/3/2010

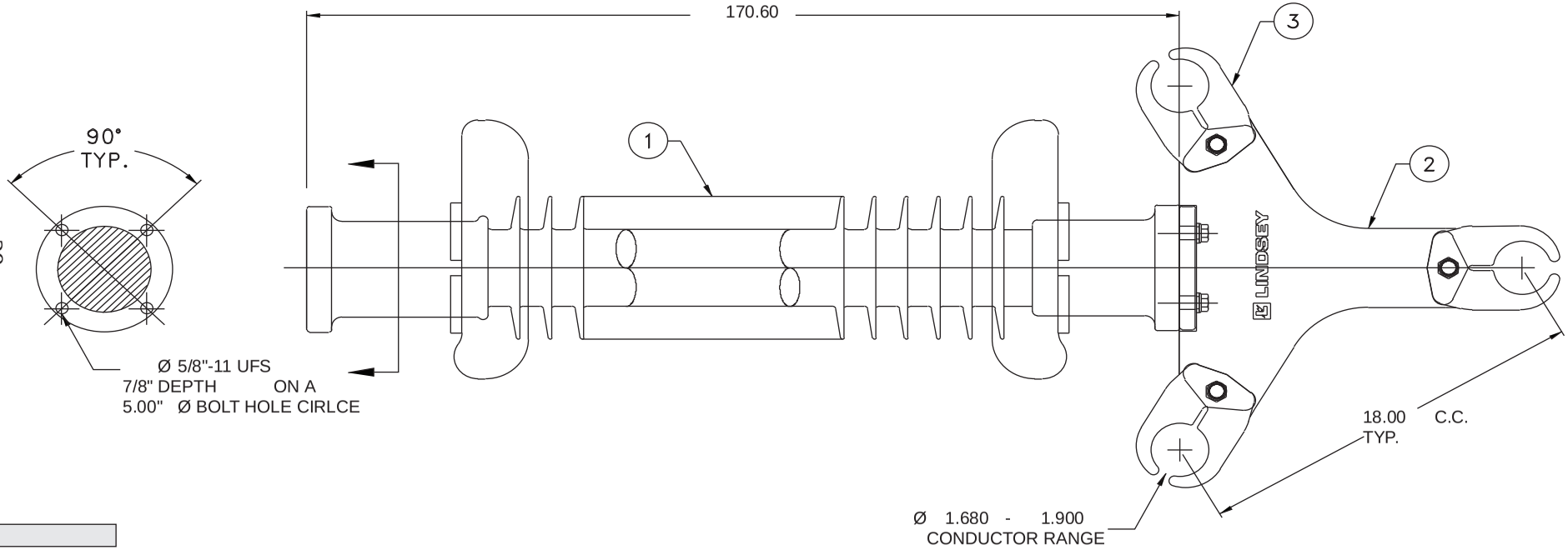

Tint block indicates alternate sizing available see catalog section 8, pages 30 - 35

6. SPECIFY ALL ARMOR RODS TO BE CORONA FREE.
5. BOLT-NUT-COTTER PIN (BNC) ON ALL STRAIGHT OR CURVED BOLTS.
4. ALL PARTS TO BE FABRICATED AND TESTED AS PER I.E.E.E.. SPECIFICATION C135.61
3. ALL COTTER KEYS ARE HUMPBACK STAINLESS STEEL (TYPE 304) .
2. FINISH: ALL FERROUS PARTS ARE HOT DIPPED GALV. PER ASTM STD. A-123 .
ALL FERROUS FASTENERS ARE HOT DIPPED GALV. PER ASTM STD. A-153 .
1. ALL DIMENSIONS ARE IN INCHES.

DESIGNED BY	DATE	LINDSEY MANUFACTURING CO.		
PL	1/3/2010	500kV 3-CONDUCTOR POST NCI INSULATOR ASSY.		
JOB. REF.		PROJECT	DWG	REV
CATALOG REFERENCE			3C-POSTJ-NCI	1

Due to variations in conductor size, insulator design, etc., not all assemblies have been corona tested at all voltage levels. Please confirm with the factory at time of quotation.

Variable Components for EHV Assemblies

Typical ACSR Conductor for 345 kV and 500kV Assemblies

Table indicates which Lindsey clamp works best with the conductor size shown. Suitability of the clamp at any given voltage depends on the overall assembly design, bundle size, choice of insulator, etc.. Please consult factory at time of quotation.

Code Word	Size (kcmil)	Stranding (Al/Stl)	Bare Diameter (in)	LINDSEY Suspension Clamp For Bare Conductor Part No.	Preformed Armor Rod Part No.	Diameter Over A/R (in)	LINDSEY Suspension Clamp With A/R Part No.
Coot	795	36/1	1.040	**1415/111**	AR-0502	1.66	**1415/186**
Drake	795	26/7	1.107	**1415/111**	AR-0504	1.727	**1415/186**
Tern	795	45/7	1.063	**1415/111**	AR-0502	1.683	**1415/186**
Condor	795	54/7	1.092	**1415/111**	AR-0503	1.712	**1415/186**
Mallard	795	30/19	1.140	**1415/120**	AR-0505	1.76	**1415/186**
Ruddy	900	45/7	1.131	**1415/120**	AR-0504	1.751	**1415/186**
Canary	900	54/7	1.162	**1415/120**	AR-0506	1.782	**1415/186**
Rail	954	45/7	1.165	**1415/120**	AR-0506	1.785	**1415/186**
Cardinal	954	54/7	1.196	**1415/120**	AR-0506	1.816	**1415/186**
Ortolan	1033.5	45/7	1.212	**1415/143**	AR-0507	1.942	**1415/204**
Curlew	1033.5	54/7	1.245	**1415/143**	AR-0507	1.975	**1415/204**
Bluejay	1113	45/7	1.258	**1415/143**	AR-0507	1.988	**1415/204**
Finch	1113	54/19	1.292	**1415/143**	AR-0508	2.022	**1415/204**
Bunting	1192.5	45/7	1.302	**1415/143**	AR-0508	2.032	**1415/204**
Grackle	1192.5	54/19	1.337	**1415/143**	AR-0509	2.067	**1415/214**
Bittern	1272	45/7	1.345	**1415/143**	AR-0509	2.075	**1415/214**
Pheasant	1272	54/19	1.381	**1415/143**	AR-0509	2.111	**1415/214**
Dipper	1351.5	45/7	1.386	**1415/143**	AR-0509	2.116	**1415/214**
Martin	1351.5	54/19	1.424	**1415/143**	AR-0510	2.296	**1415/248**
Bobolink	1431	45/7	1.427	**1415/143**	AR-0510	2.299	**1415/248**
Lapwing	1590	45/7	1.504	**1415/163**	AR-0511	2.376	**1415/248**
Falcon	1590	54/19	1.544	**1415/163**	AR-0512	2.416	**1415/248**
Chukar	1780	84/19	1.602	**1415/163**	AR-0513	2.474	**1415/248**
Bluebird	2156	84/19	1.762	**1415/186**	AR-0516	2.634	**1415/271**
Kiwi	2167	72/7	1.735	**1415/186**	AR-0516	2.607	**1415/263**

EHV Suspension Clamps

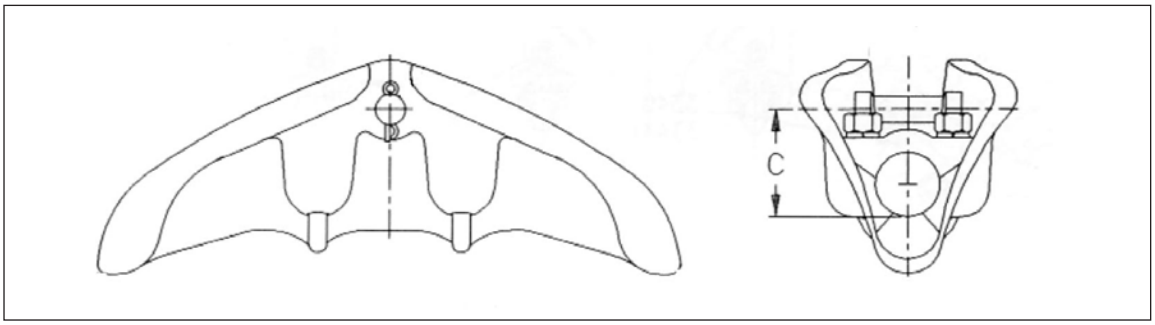

LINDSEY Part No.	"C" DIM.	Min. Cond.	Max Cond.
1415/111	2.25	1.000	1.110
1415/120	2.38	1.100	1.200
1415/143	2.56	1.210	1.430
1415/163	2.75	1.430	1.630
1415/186	3.00	1.630	1.860
1415/204	3.44	1.800	2.040
1415/214	3.50	2.040	2.140
1415/228	3.56	2.055	2.280
1415/248	3.63	2.275	2.480
1415/263	3.75	2.430	2.630
1415/271	3.88	2.605	2.710
1415/277	4.00	2.660	2.770

15 Kip Side Opening Jumper Clamp

LINDSEY Part No.	Min. Cond.	Max. Cond.
1401	1.050	1.200
1402	1.220	1.370
1403	1.400	1.680
1404	1.680	1.900
1405	1.900	2.100
1406	2.100	2.300
1407	2.300	2.500
1408	2.500	2.600
1409	2.600	2.700
1410	2.700	2.800

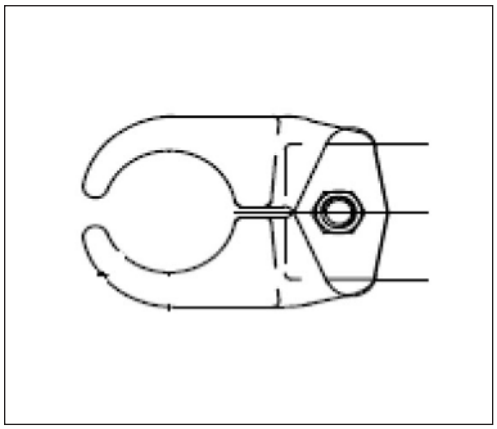

Due to variations in conductor size, insulator design, etc., not all parts have been corona tested at all voltage levels. Please confirm with the factory at time of quotation.

Anchor Shackles

LINDSEY Part No.	Opening	Bolt Dia.	Length	Wt. (lbs)	Strength KIP
3231BNC	0.88	0.63	2.75	1.31	30
3250BNC	0.88	0.75	4.63	1.90	30
3252BNC	0.88	0.75	3.50	2.45	60
3256BNC	1.44	1.00	3.75	4.00	80
3257BNC	1.19	1.13	4.31	5.50	80
3260BNC	0.81	0.63	2.25	0.84	30
3261BNC	1.06	0.75	2.88	1.75	40
3262BNC	1.25	0.88	3.44	2.50	60
3263BNC	1.44	1.00	3.78	4.00	73
3264BNC	1.69	1.13	4.31	5.50	102
3265BNC	1.81	1.25	4.88	7.50	114
3266BNC	2.00	1.38	5.19	11.00	144
3267BNC	2.25	1.50	6.00	13.50	168
3268BNC	2.38	1.63	5.56	18.50	204
3269BNC	0.88	0.75	5.00	3.00	50

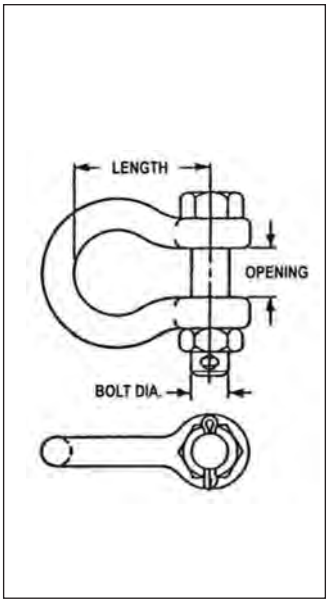

OE-OE Hot Line Links

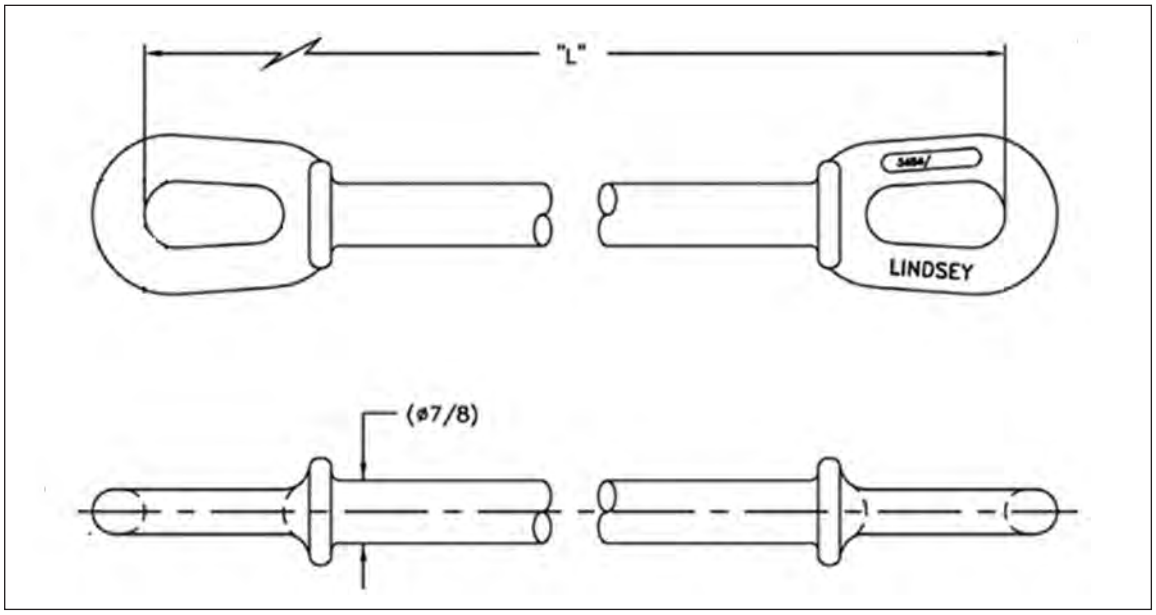

The Lindsey 3484 30 Kip and the 3487 50 Kip Oval-Eye Oval-Eye Hot Line Links can be forged in 0.5 inch increments from 12 inches to 200 inches.

Due to variations in conductor size, insulator design, etc., not all parts have been corona tested at all voltage levels. Please confirm with the factory at time of quotation.

9: Sample Specifications

DETAILED REQUIREMENTS

1.0 General Design Requirements:

The Supplier shall furnish hardware and insulator assemblies in accordance with the detailed requirements set forth in this Section.

1.1 ***Hardware Assembly Design Requirements***: All hardware assemblies shall be supplied in accordance with the attached specification drawings.

All hardware components, including yoke plates shall be warranted against brittle failure under the loading conditions normally expected to be experienced over the life of the line.

Holes for cotter pins in the heads of sockets shall be recessed so the head of the cotter pin does not protrude beyond the general outside curvature of the socket. These holes shall also be "tear drop" or "pear" shaped to facilitate entry of hot-line tools into the eye of the cotter pin. The cotter pin shall be humped and shall have the ends spread so the cotter pin cannot be pulled completely from the socket.

Hardware parts which intermember shall have comparably shaped mating surfaces for maximum bearing area. All components of the same design and designation shall be identical and like components shall be interchangeable.

Where collection of water may occur, provision shall be made for draining.

All applicable conductor hardware shall intermember with insulators as shown on the drawings.

Conductor suspension clamps and jumper clamps shall be sized for the conductor with armor rods.

All pinned connections shall be made with hex head bolts with hex nuts and stainless steel humpback cotter pins. Conductor suspension clamps shall be supplied with hex head bolts with hex nuts and stainless steel humpback cotter pins or have non-rotating pins with stainless steel humpback cotter pins.

The nominal diameter of cotter pins, designed for securing suspension clamps, shall not be less than 1/4 the diameter of the pins or bolts in which they are to be installed. Pins or bolts with diameter in excess of one inch shall use a 1/4-inch cotter pin.

All assemblies shall be designed for convenient use of hot-line tools and for application of “hot-line” maintenance techniques.

All assemblies shall demonstrate that all fittings have been designed to permit free movement.

All single legs of the V-string conductor insulator suspension hardware assemblies, and all conductor jumper loop restraint hardware assemblies shall include a hot-line link to be located between the tower attachment plate and the de-energized end of the insulator strings. The shoulders provided for accommodation of the hot-line tools shall be a minimum of 6 inches apart.

The 3-conductor yoke plates of the V-string conductor insulator suspension hardware assemblies shall be designed with hot-line seats on the side of all the single insulator legs so that a 2-pole strain carrier with 26 inch saddle can be used on the single leg between the 3-conductor yoke plates and the hot-line shoulders of the tower-end extension links. The hot-line seats shall be a minimum of 1 1/8 inches wide.

The insulator yoke plates of the conductor insulator dead-end hardware assemblies shall be designed so that a 26 inch 2-pole strain carrier yoke can be installed without removing the corona rings.

Any holes in addition to the lifting and working holes, shown on the drawings, which may be required for hot-line maintenance, shall be a minimum of 1 1/8 inch in diameter and shall be chamfered.

Any shielding rings, which may be necessary to meet the requirements of this Division, shall be furnished as part of the hardware assemblies. The shielding rings shall be capable of being removed and reinstalled while the line is energized.

1.2 ***Insulator Design Requirements:***

1.2.1 ***Housing (Sheath and Weathersheds)*** The fiberglass core of the polymer insulators shall be protected with a rubber housing which shall be made of a silicone elastomeric compound having minimum 30% silicone *(or having a Si-O chemical backbone with fumed silica and tracking control filler, ATH)*. The housing shall be directly molded on the core through high temperature vulcanization process and shall be seamless, smooth and free of imperfections.

The housing shall be manufactured of 100 percent silicone rubber before fillers are added. The housing shall be in one-piece without any rubber-to-rubber joint in any part of the housing

The housing shall be directly bonded to the FRP core. The interface between the housing and FRP rod shall be chemically bonded to prevent contaminants and moisture ingress. The strength of core-to-housing interface shall be greater than the tearing strength of the housing material itself.

The thickness of the housing shall be no less than 3.0 mm.

The color of the housing material shall be gray, and uniform and consistent.

Polymer insulators shall be designed to withstand high-pressure water washing with 570 psi, nozzle diameter 1/4" and the distance of 10 feet from nozzle to polymer insulators. The submitted data must include the test results of "Tracking and Erosion Test" from IEC 61109 Annex C.

1.2.2 ***Core*** The core shall be a high quality fiber reinforced plastic (FRP) rod. The FRP rod shall be an epoxy fiberglass rod having superior electrical performance and mechanical strength.

The insulator core shall be mechanically and electrically sound, free from visible voids, foreign substances, and other manufacturing flaws.

1.2.3 ***End-fittings*** The mechanical forces will be transferred to the FRP rod by end fittings attached to the ends of the rod. The end fittings shall be made of forged steel or ductile iron. Ball fittings shall be made of forged steel**.**

The end fitting configuration and dimension shall conform to the applicable requirements and gauging of ANSI C29.2.All ferrous materials (except stainless steel) shall be hot-dip galvanized in accordance with ASTM A153.

1.2.4 ***Assembly*** The end fitting shall be attached to the FRP rod using a controlled compression process. The compression force used shall not be high enough to cause internal rod cracks.

All end fittings shall be attached to FRP rod by an automatic crimping process. The process must be controlled to detect, record, and reject damaged pieces during crimping by acoustic emission method or other equivalent method. Documentation shall be submitted to completely describe the crimping method used prior to award of contract.

The interface of the metal end fitting and the housing shall be permanently sealed to prohibit the entrance of moisture.

If RTV is used as part of the sealing system, it must be demonstrated that the absence of RTV sealant would not cause failure of interface tightness test per IEC 61109 Amendment 1.

1.2.5 ***Corona Ring*** Polymer insulator shall have grading ring(s) attached. The RIV and corona performance of insulator with corona ring(s) shall conform to the requirement specified in ANSI C29.12 for suspension insulators and ANSI C29.17 for line post insulators at least.

1.2.6 ***Marking*** The marking shall be legible, durable and permanently marked as follows:

1) Manufacturers name or trademark
2) Specified mechanical load or Maximum design cantilever load
3) Routine mechanical load
4) Year of make and series number

2.0 Material Requirements:

2.1 ***Hardware Assemblies***: All materials shall be of recent manufacture. All parts made of ferrous material, except stainless steel, and the weights furnished, shall be thoroughly and completely galvanized in accordance with the requirements of ASTM A 153, as last revised.
All weights shall be painted with a zinc-rich organic paint, having a dry-film weight of 92 through 95 percent zinc, having a dry-film thickness of not less than 3 mils, or shall be galvanized in accordance with ASTM A 153, as last revised.
All flashings shall be accurately sheared to the contour of the forging or ground flush with the main forging surface. All material shall be free from flaws, scale inclusions, or other defects.

Cotter pins used on socket fittings shall be of stainless steel.

Shackles, ball fittings and oval eye extension links shall be of drop-forge steel.

Nuts, bolts, studs, and screws shall conform to the ANSI Standards of pitch, thread shapes, dimensions, and tolerances.

2.2 ***Spare Hardware:*** The following percentages of spare hardware shall be bulked packed and shipped with the first hardware assemblies shipped to each specified destination. The percentages apply to the total quantity of hardware shipped to that destination.

> 1% of all nuts and bolts, including U-bolts, of all sizes.
> 3% of all cotter pins of all sizes.

2.3 ***Insulator Assemblies:*** The polymer insulators shall be designed, manufactured and tested in accordance with the requirements of the latest published edition of the following standards unless otherwise noted.

ANSI C29.1: Electric Power Insulators, Test methods
ANSI C29.2: for insulators - Wet-Process porcelain and Toughened Glass-Suspension type
ANSI C29.11: for Composite Suspension Insulators for Overhead Transmission Line - Tests
ANSI C29.12: for insulators - Composites - Suspension Type
ASTM A 153: Zinc Coating (Hot Dip) on Iron and Steel Hardware
IEC 61109 and Amendment 1:
Composite insulators for a.c. overhead lines with a nominal voltage greater than 1000V - Definitions, test method and acceptance criteria.
IEC 61952: Composite Line Post insulators for a.c. overhead lines with a nominal voltage greater than 1000V - Definitions, test method and acceptance criteria.
ANSI C29.17: for insulators – Composite – Line post type

3.0 Hardware Assembly Marking:

3.1 ***Container Marking***: All hardware containers shall be marked clearly and legibly with waterproof paint of a color which contrasts with the container. All letters and numbers shall be not less than one-half inch high. All hardware containers shall be marked as follows:

Purchase Order Number
Contract Item Number
Assembly Name and Number
Tower Type and Number
Item Description
Quantity
Container _____ of _____

In addition, each package shall be marked with a weatherproof identification tag. The identification tag shall be able to withstand fluctuating temperatures, with a minimum ambient temperature of 0F and maximum ambient temperature of 120F, and continuous exposure to sunlight and weather, for 2 years without losing readability or adhesiveness.

3.2 ***Hardware Marking*:** Each part of each hardware assembly shall be clearly and permanently marked with a number so that the part can be readily identifiable from the Supplier's drawings.

3.3 ***Hardware Packaging:***
All hardware shall be packaged by assemblies in the fewest number of containers possible. Hardware assemblies shall be packaged by tower type in multiples of 3. The energized end of suspension hardware assemblies shall be pre-assembled except for suspension clamps and their Y-clevis fittings. The de-energized ends and energized ends of the dead-end assemblies shall be pre-assembled except for corona rings. If multiple containers are required to package an assembly, each container shall be clearly marked as to assembly number or type and the specific container number of the total number of containers for that particular assembly. For example: "XXXX Assembly: Container 1 of 4".

3.3.1 When multiple containers are banded together on the same pallet the following shall apply:

3.3.2 The pallet shall contain only similar items or containers for only one type of an assembly or tower. Each separate container on the pallet shall be clearly marked with the assembly and container markings.

3.3.3 Cardboard and wood wire bound boxing is not acceptable. Minimum thickness of boxing material is '5 inch wood.

3.3.4 The pallet shall be clearly marked with the assembly and tower type included on the pallet, the specific container number of the total assembly containers, and the number of containers included on the pallet.

3.3.5 The packing slip included with the shipment shall identify the total number of containers of each assembly type shipped rather than the number of pallets shipped.

3.3.6 The Owner will receive the material by container per assembly or tower type.

3.3.7 Eye-Eye shoulder rods shall be banded together by the number required for that particular assembly. Banded shoulder rods for a number of assemblies for one tower type may be grouped together on the same shipping pallet.

3.3.8 Corona rings, spare hardware and armor rods shall be bulk packed separately.

3.3.9 Jumper String weights shall be banded in sets of 6 (300 lbs.) for a particular assembly and may be grouped with others in sets of 6 on the same pallet. The jumper weights shall be given a specific container number of the total number of containers for the particular assembly. The maximum weight of any pallet shall not exceed 1600 lbs.

3.3.10 All other hardware components for a particular assembly shall be boxed together in the minimum number of containers possible.

3.3.11 Insulators shall be shipped in wooden crates with the corona rings packed inside the crates. Insulator shall be supported in the containers by each end with movement restricted in all directions. Long insulators shall also be supported in the middle such that the longest distance between supports is six feet. Insulators shall be protected from all abrasion due to vibration during shipment. Each insulator container shall be labeled with the Contract Item number, Item description, quantity, specific part number, RTL, SML and tension ratings.

3.3.12 Marking of each container shall be legible from 15 feet away. Marking shall be on two sides or two locations on opposite sides of the container and/or pallet. Boxes or containers shall be designed not to collapse when banded on pallets. Collapsed containers shall be rejected and not accepted by the Owner. No container shall weigh more than 400 lbs. nor shall any pallet weigh more than 1600lbs.

4.0 Shipment:

The Supplier shall submit to the Owner for review, 60 calendar days prior to delivery, detailed drawings of proposed packaging design for each Item, showing the following information:

a. Item packing, giving all dimensions and net and gross weights.

b. Pallet packing, giving all dimensions and net and gross weights.

All hardware shall be properly contained to prevent damage during transit. Containers for hardware shall be of appropriate size and substantial construction to prevent collapse during handling and transit. The contained hardware shall be shipped on pallets. Pallets shall be the 2-way entry nonreturnable types. All containers shall be securely banded to the pallet with metallic bands. All material delivered by truck shall be capable of being unloaded from 3 sides of the truck bed with a forklift loader.

5.0. Factory Inspection and Tests:

Supplier shall submit with his proposal the administrative controls utilized to assure that the product meets the requirements of this Specification. Examples of items to be addressed include procurement and receipt of raw material, personnel qualification, in-process conformance checks and acceptance of the final product prior to shipment. Supplier shall submit a list and examples of all forms (which will be prepared to document the Quality Control procedures) covering: the materials to be supplied under this Specification, indicate which of these items will be sent to the Owner during execution of the contract, and where the balance of the documents will be filed. These Quality Control procedures and documents will be subject to the review and approval of the Owner.

5.1 ***Inspection:*** Raw materials, components and completed products as well as production processes shall be subject to inspection by the Owner and/or its representative.

During working hours, the Owner's representatives shall have access to all parts of the works where materials covered by the Owner's order are being manufactured and shall be provided by Supplier with all standard inspection facilities, so that any or all insulator parts or all hardware items or components thereof may be individually inspected. Any insulator and part or hardware items or components or complete insulator and hardware assembly for this order may be selected for test by the Owner's representatives at any time. The Owner will reject any item determined unsatisfactory by inspection.

Acceptance tests are required to show that all individual material furnished fully meets applicable guarantee. Supplier shall assume full responsibility that all material, including all subcontracted material, meets the requirements of this specification.

All tests at the factory (as determined necessary by the Owner to verify adequacy of raw materials, components, and complete product to meet specifications) shall be made by and at the expense of the Supplier; and Supplier shall furnish all test specimens, apparatus, and instruments required for the purpose.

The Owner and/or its designated representatives reserve the right to witness any and all tests. Testing schedules for all tests, other than routine tests, shall be submitted to the Owner not less than seven days prior to testing. Upon request of the Owner, Supplier shall reschedule tests as mutually acceptable to the Owner and Supplier.

Should the Owner elect to waive the right of inspection or of witnessing tests and accept certified test reports instead, the Owner will promptly inform the Supplier.

Five copies of certified reports of all tests shall be furnished to the Owner for review within 20 calendar days after completion of testing. The Owner will inform the Supplier within 20 calendar days after receipt of the certified test reports, either that there are no exceptions noted or that the test results show noncompliance with the specifications.

If the test results show noncompliance, the Supplier shall not ship the materials or equipment covered by such certified test reports until the noncompliance is corrected or unless otherwise instructed by the Owner.

5.2 ***Suspension Insulator Test Requirements:*** All polymer suspension insulators shall have completed the following Prototype, Design, Sample and Routine tests procedures described in ANSI C29.11 and IEC Pub. 61109 Amendment 1, unless stipulated otherwise in this specification.

5.2.1 ***Prototype tests:*** The following tests shall be performed: (Certified test reports based on tests performed prior to award of this contract may be accepted provided that the test requirements and product design have not been changed.)

1) Tests on interfaces and connection of end fittings (ANSI C29.11 clause 7.1)
2) Core time-load test (ANSI C29.11 clause 7.2)
3) Test of housing: Tracking and erosion test (IEC 61109 Annex C)
4) Core material test (ANSI C29.11 clause 7.4)
5) Flammability test (IEC 61109 Amendment 1 clause 5.5)

The Bidder must submit with bid a Certified test report on insulators of identical 'class' performed by an independent laboratory. The definition of insulator class is as per ANSI C29.11 Clause 4.1.

5.2.2 ***Design Tests:*** The following tests shall be performed and sample size should be discussed between bidder and purchaser: (Certified test reports based on tests performed prior to award of this contract may be accepted provided that the test requirements and product design have not been changed.)

1) Low frequency dry flashover test (ANSI C29.11 clause 8.2 or C29.12 clause 7.2.1)
2) Low frequency wet flashover test (ANSI C2912 clause 7.2.2)
3) Lightning critical-impulse flashover test (ANSI C29.11 clause 8.1 or C29.12 clause 7.2.3)
4) Wet switching critical-impulse flashover test (ANSI C29.11 clause 8.3) for system voltage in excess of 300kV phase to phase.
5) Radio interference voltage test (ANSI C29.12 Clause 7.2.4)

All the electrical tests shall be performed on insulators with grading ring(s) if applicable.

5.2.3 ***Sample Tests:*** The following tests shall be performed on insulators randomly selected from each production lot.

The Sampling rule shall be in accordance with ANSI C29.11 clause 9.1. If the quantity is less than 100, it shall be discussed between bidder and purchaser

Retest procedure stipulated in ANSI C29.11 Clause 9.6 should be strictly followed if any failure occurs at the sample tests.

1) Verification of dimensions (ANSI C29.11 clause 9.2)
2) Verification of locking system (ANSI C29.11 clause 9.3, if applicable)

3) Mechanical load test (ANSI C29.11 clause 9.4)
4) Verification of the interface between end fittings and insulator housing (IEC 61109 Amendment 1 clause 7.4 a)
5) Galvanizing test (ANSI C29.11 clause 9.5)

5.2.4 ***Routine tests*** The following tests shall be performed on every insulator prior to shipment.
1) Mechanical test (ANSI C29.11 clause 10.1)
2) Visible examination (ANSI C29.11 clause 10.2)

The purchaser reserves the right to witness sample and routine tests.

5.3 ***Post Insulator Test Requirements:*** All polymer line post insulators shall have completed the following Design, Type, Sample and Routine tests procedures described in ANSI C29.17, unless stipulated otherwise in this specification.

5.3.1. ***Design tests:*** The following tests shall be performed: (Certified test reports based on tests performed prior to award of this contract may be accepted provided that the test requirements and product design have not been changed.)
1) Tests on interfaces and connections of end fittings (ANSI C29.17 clause 7.1)
2) Assembled core load tests (ANSI C29.17 clause 7.2)
3) Housing : Tracking and erosion test (IEC 61109 Annex C)
4) Core material tests (ANSI C29.17 clause 7.4)
5) Flammability test (ANSI C29.17 clause 7.5)

5.3.2. ***Type Tests:*** The following tests shall be performed: (Certified test reports based on tests performed prior to award of this contract may be accepted provided that the test requirements and product design have not changed.)
1) Low frequency wet flashover test (ANSI C29.17 clause 8.1)
2) Low frequency dry flashover test (ANSI C29.17 clause 8.2)
3) Lightning critical-impulse flashover tests (ANSI C29.17 clause 8.3)
4) Radio-influence voltage and visible corona test (ANSI C29.17 clause 8.4)
5) Wet power - frequency test (IEC 61109 clause 6.2)

All the electrical tests shall be performed on insulators with grading ring(s) if applicable.

5.3.3. ***Sample Tests:*** The following tests shall be performed on insulators randomly selected from each production lot.

The Sampling rule shall be in accordance with ANSI C29.17 clause 9.1. If the quantity is less than 100, it shall be discussed between bidder and purchaser

Retest procedure stipulated in ANSI C29.17 Clause 9.6 should be strictly followed if any failure occurs at the sample tests.
1) Verification of dimensions (ANSI C29.17 clause 9.2)
2) Galvanizing test (ANSI C29.17 clause 9.3)
3) Verification of cantilever strength test (ANSI C29.17 clause 9.4)
4) Specified tensile load test (ANSI C29.17 clause 9.5)

5.3.4. ***Routine Tests:*** The following tests shall be performed on every insulator prior to shipment.

1) Tensile load test (ANSI C29.17 clause 10.1)
2) Visible examination (ANSI C29.17 clause 10.2)

The purchaser reserves the right to witness sample and routine tests.

5.4 ***Tests for Radio Influence Voltage and Corona:*** All conductor hardware assemblies shall be designed to minimize corona discharge and shall have a corona extinction voltage of not less than 365 kV line-to-neutral. Radio influence voltage (RIV) from any hardware assemblies shall not exceed 100 microvolts at one megahertz when tested at 365-kV line-to-neutral.

5.4.1 ***Corona Test:*** The insulator assemblies shall be subjected to a 60 Hz voltage to determine that the corona extinction voltage level is not less than 365-kV, line-to-ground with ground plane a maximum of 15 feet. from the assemblies. Care shall be taken to eliminate corona from all sources other than the test samples.

The corona detection device shall be a light amplifier with a gain of 30,000 or more with a F/2.8 or faster lens. The test specimen image when viewed shall be no smaller that 20 percent of the light amplifier screen. The device shall be able to detect light generated by corona in the visual spectrum.

In a dark laboratory the test specimen shall be energized with a high enough voltage to create detectable positive corona discharge on the specimen with the light amplifier. This is to prove the detection system is working.

In a dark laboratory with an applied voltage higher than 365-kV L-G (high enough to create positive corona) and the ground plane in place, the voltage shall be lowered to 365-kV L-G. The test specimen shall be viewed from at least two directions approximately 180o apart on the plane of the building floor that has the best view of the flat plane or planes of the test specimen. There shall be no visible positive corona on the test specimen.

5.4.2 RIV characteristics shall be determined as follows: A 60-Hz voltage shall be raised to a level where substantial positive corona activity is detected. A RIV measurement shall be taken using the procedure specified by NEMA 107-1987. The voltage shall then be lowered in steps until the RIV level reaches background levels. RIV measurements shall be taken at each step.

A plot of RIV versus impressed voltage shall be made

5.5. ***Proof of Fit Tests:*** A proof of fit test of each Assembly shall be performed before shipment.

One sample of each Item shall be fully assembled in a configuration of actual use to verify that all parts will mate properly.

5.6. ***Additional Tests at Other Testing Laboratories:*** The Owner may select any number of samples of finished Insulator and Hardware assemblies or components thereof, from any lots furnished by Supplier under which these Specifications to be sent to any testing laboratory which the Owner may designate for verification of tests or characteristics or for such additional investigation and tests as the Owner may desire. Such samples shall be considered as part of the quantity or quantities of the purchase order.

5.7 ***Routine Mechanical Load Acceptance Testing:*** All transmission line load rated hardware purchased under this specification shall be tested to ANSI C-135.61 "Testing of Transmission and Distribution Line Hardware", and shall meet the following acceptance criteria.

Pins or bolts normally furnished with the hardware shall be used during all tests.

The minimum sample size for acceptance testing is defined in Table 1, below. The inspection level required is based on quantities of the hardware unit to be purchased under this specification.

A Tensile test shall be performed on sample quantities defined in Section 5.2.9.2. The load shall be started at zero and smoothly brought up. The load may be increased rapidly to approximately 75% of rated strength. Load shall then be smoothly applied at a rate of 25% of rated strength per minute until point of failure.

The acceptance of a lot shall be determined from Table 2, below. And, a defective component of hardware within a lot is defined as a unit that, when tested, falls below the specified rated ultimate strength.

The lot shall be considered acceptable when the number of defects found in the first (or single) sample is equal to or less than the first acceptance number from Table 2. If this acceptance criteria is met on the first sampling, a second sampling is not needed. If the number of defects found in the first or single sample is equal to or greater than the first rejection number, the lot shall be rejected without a second sampling being allowed. If the number of defects found in the first sample is between the first acceptance and rejection numbers, a second sampling of the size given in Table 1 shall be tested. The number of defects found in the first and second samples shall be accumulated. If the cumulative number of defects found is equal to or less than the second acceptance number, the lot shall be considered acceptable. If the cumulative number of defects is equal to or greater than the second rejection number, the lot shall be rejected.

Table 1.
SAMPLE SIZE

LOT SIZE	MINIMUM SAMPLE SIZE
3 to 150	5
151 to 1,200	13
1,201 to 10,000	20
Greater than 10,000	32

Table 2.
ACCEPTANCE / REJECTION CRITERIA

TEST SAMPLE	SAMPLE SIZE	CUMULATIVE SAMPLE SIZE	ACCEPT	REJECT
Single	5	N/A	0	1
First Second	13 13	13 26	0 1	2 2
First Second	20 20	20 40	0 3	3 4
First Second	32 32	32 64	1 4	4 5

The entire lot shall be rejected if a tested unit is found to have a major defect. A major defect being defined as a unit which fails below 85% of its specified rated ultimate strength.

Five (5) certified typed copies of the Sampling Test Reports shall be provided to the Manager of Electric System Engineering. These test reports shall contain at a minimum the following:

- Date of Test
- Location of Test
- Catalog Number of Component
- Hardware Component Rating (Ultimate)
- Test Procedure and Description of Test Setup
- Date of last calibration of test equipment
- Test values at which failure occurred and a description of the failure
- Number tested
- Description of failure
- Average Test Value $X_{avg} = (X_1 + X_2 + .. + X_n)/n$
- A statement that the hardware conforms, or does not conform, to the requirements of this specification
- Personnel present
- Signature of certification

5.7. ***Wet Magnetic Particle Tests:*** All items made of ferrous materials shall be tested using wet fluorescent magnetic particles in accordance with ASTM E 709. Wet magnetic particle tests shall be done after completion of fabrication and die stamping and prior to galvanization.

Direct current magnetization shall be used with prods, yokes, and coils sufficient to disclose the presence of any surface or underlying defects which might result in failure of the part under load. For this purpose, circular, longitudinal, or swing magnetic fields, or any combination thereof shall be employed to obtain a satisfactory test indication. The test operator shall be trained and qualified to perform magnaflux tests.

Indications of cracks, inclusions, or surface defects in a part will be cause of rejection. Rejected parts shall not be reworked and resubmitted for acceptance.

INNOVATIONS IN EHV HARDWARE DESIGNS

LINDSEY SYSTEMS

Lindsey Manufacturing Co.
760 N. Georgia Ave.
Azusa, CA 91702 USA
Tel (626) 969 3471
Fax (626) 969-3177
Web www.lindsey-usa.com
Email mail@lindsey-usa.com

Publication Number 03B-001 EHV INNOVATIONS • 4-2023